409970

63-4-2

REPORT R-1630

UNITED STATES ARMY

FRANKFORD ARSENAL

CATALOGED BY DDC
AS AD No.
409 970

A NEW METHOD OF IGNITION DEVELOPED FOR RECOILLESS GUNS FIRING FIN-STABILIZED PROJECTILES

by

A. LEVINE

OMS Code 5520.11.43400.01
DA Project 502-01-008

DDC
RELEASED
JUL 9 1963
TISIA B

REPORT R-1630

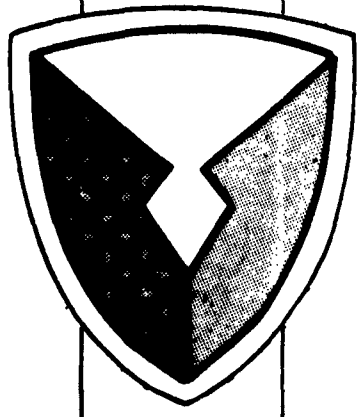

December 1962

PHILADELPHIA 37, PA.

Qualified requesters may obtain copies from Armed Services Technical Information Agency, Arlington Hall Station, Arlington 12, Virginia.

The findings in this report are not to be construed as an official Department of the Army position.

REPORT R-1630

A NEW METHOD OF IGNITION DEVELOPED FOR RECOILLESS GUNS FIRING FIN-STABILIZED PROJECTILES

OMS Code 5520.11.43400.01 DA Project 502-01-008

Prepared by:

A. LEVINE
Physicist

Reviewed by:

D. J. KATSANIS
Chief
Ballistics & Supporting Research Br.

Approved by:

C. C. FAWCETT
Acting Chief
Research and Development Group

For:

GEO. H. PIERRE
Colonel, Ordnance Corps
Commanding

Research and Development Group
FRANKFORD ARSENAL
Philadelphia 37, Pa.

December 1962

ABSTRACT

The principles of uniform ignition formulated for special types of recoilless weapons have been applied to recoilless weapons firing fin-stabilized projectiles. A new ignition system, consisting of the following, has been developed for these weapons:

(1) A duPont Company pyrocore explosive train (axially located within a hollow tail boom and extending the entire length of the boom).

(2) An M47 detonator (used to fire the pyrocore explosive train).

(3) A special housing which contains the firing pin, M47 detonator, and one end of the pyrocore.

(4) A slotted tail boom with a small diameter central hole extending the entire length of the boom.

(5) A polyethylene container for retaining the A1 black powder.

(6) A fixed quantity of A1 black powder.

(7) A cardboard container for retaining the propellant charge.

(8) A fixed quantity of propellant charge.

Better uniformities in chamber pressures and muzzle velocities have been obtained at ambient temperature when the new ignition system has been used to fire the 90 mm M67 recoilless gun, as compared with the ballistic results obtained with the previous ignition system.

Recommendations have been made that an engineering evaluation program be initiated in order to verify the parameters applicable to various weapon systems.

TABLE OF CONTENTS

	Page
INTRODUCTION.	1
THEORY AND PROCEDURE	2
Previous Ignition System.	2
Tail Boom	2
Paper Primer Tube	2
Percussion Primer Housing Components.	2
Action of the Ignition System	3
Shortcomings of the Ignition System	3
New Ignition System	4
Velocity of the Flame Front.	4
Tail Boom	4
Ignition of the Explosive Train	7
Plastic Container	9
Distribution of the Propellant Charge.	15
DISCUSSION.	23
Pyrocore-Black Powder Combination vs Al Black Powder.	27
Tail Boom with 16 Slots	27
Tail Boom with 32 Narrow Slots.	28
Lead Azide Explosive Train	31
Summary of the Ballistic Data.	34
CONCLUSIONS AND RECOMMENDATIONS	35
APPENDIX A - Test Results, Aberdeen Proving Ground .	37
APPENDIX B - Drawings of Tail Booms.	41
DISTRIBUTION.	46

INTRODUCTION

When recoilless guns employing fin-stabilized projectiles are fired, the muzzle velocities obtained are found to vary from round to round. For example, a weapon such as the 90 mm M67 recoilless gun has a standard deviation ranging from 11 to 15 fps;[1] a weapon such as the 120 mm XM89 recoilless gun has a standard deviation ranging from 7 to 9 fps. It is desirable to decrease such deviations as much as possible.

An analysis of the ballistic performances of the above weapons has indicated that, in order to obtain improved velocity uniformity for these guns, it would be necessary to develop a method of ignition by means of which the propellant charges could be ignited in a more efficient way. The 90 mm M67 recoilless gun was chosen as the test vehicle for the proposed program, the object of which was twofold - to establish the principles of uniform ignition for recoilless guns firing fin-stabilized projectiles and, based on these principles, to develop an improved ignition system for these weapons.

An analysis of the test results obtained at Aberdeen Proving Ground (Appendix A) and from experimental firings at the Frankford Arsenal indicated that M5 granular propellant (0.026 in. web) was suitable for the 90 mm M67 recoilless gun. Accordingly, in all ballistic studies performed in this work, the above propellant was used.

---

[1] P. J. Wilds and D. E. Walters, "Present and Advanced PAT Recoilless Weapon Systems" (U), Frankford Arsenal Report R-1833, Apr 57 (Conf)

THEORY AND PROCEDURE

Based on the work done in developing an ignition system for the Davy Crockett XM28 and XM29 recoilless weapon systems,[2, 3] new principles of uniform ignition have been formulated. Using these principles as a guide, a new ignition system has been developed for the 90 mm gun. To clarify the principles of the new system, a comparison will be made with the previous method of ignition.

Previous Ignition System

Tail Boom - The tail boom of the 90 mm projectile is one piece of extruded aluminum, equipped at the rear with six T-section fins. These fins stabilize the projectile in flight. A large diameter central hole extends the entire length of the body of the tail boom. The wall of the hollow tail boom is perforated with flash holes.

Paper Primer Tube - Inserted into the central hole of the tail boom is a paper primer tube filled with a fixed quantity of Al black powder. The tube is sealed at both ends.

Percussion Primer Housings Components - The following components make up the primer housing:

(1) A firing pin, which is used to initiate the percussion primer.

(2) An outer housing, which contains the firing pin.

(3) A percussion primer (used in caliber .30 ammunition).

---

[2] A. Levine, "A New Method of Ignition Developed for the XM28 and XM29 Weapon Systems" (U), Frankford Arsenal Report R-1543, Apr 60 (Conf)

[3] A. Levine, "A New Method of Ignition Developed for the Davy Crockett XM28 and XM29 Weapon Systems," Frankford Arsenal Report R-1543A, Jan 61. (Uncl)

(4) A small quantity of FFFG black powder, which fills a conical cavity formed in the body of the inner housing.

(5) A thin paper disk, which is cemented to the circular opening of the cavity. The disk prevents the black powder from being spilled out of the cavity.

The entire assembly is screwed in the end of the tail boom where the stabilizing fins are located.

Action of the Ignition System - The percussion primer is initiated and, in turn, ignites the FFFG black powder. The burning FFFG powder ignited the A1 black powder in the paper primer tube. The flames from the burning A1 black powder pass through the flash holes formed in the body of the tail boom and ignite the propellant charge surrounding the body of the boom. (In this ignition system, the propellant charge is usually placed at the rear part of the tail boom, near the stabilizing fins.)

Shortcomings of the Ignition System - In analyzing the performance of the ignition system described above, two shortcomings of this system become apparent. The first is the fact that since the column of black powder is ignited only from the end where the percussion primer is located, the ignition of the entire column will not be uniform. This is due to the fact that the velocity of propagation of the flame front along the entire length of the A1 black powder is only 1300 fps. The flame front will move relatively slowly from one end of the column to the other. Consequently, the grains of black powder at both ends of the column, as well as those at intermediate places, will not ignite at the same time. As a result of this time lag, the column of A1 black powder and, therefore, the propellant charge will not ignite and burn uniformly.

The second shortcoming arises from the fact that only the propellant adjacent to the flash holes is ignited directly. The only way possible for the other grains to ignite is by the action of flames which pass through the propellant bed. This, again, results in a definite time lag, and the propellant charge does not ignite and burn uniformly. It would be an easy matter to increase the number of flash holes in the body of the tail boom, but there is a limit to the number of holes, large or small, that can be formed in the tail boom. If this limit is exceeded, the structural integrity of the boom will be impaired.

New Ignition System

With the introduction of the new ignition system, the shortcomings of the previous method of ignition are eliminated as follows.

Velocity of the Flame Front - To increase the velocity of travel of the flame front, a pyrocore explosive train was inserted in the center of the paper primer tube containing the A1 black powder. This explosive train extended the entire length of the primer tube. The velocity of propagation of the flame front for type 2040 pyrocore is approximately 12,000 fps. Since this velocity of flame propagation is high, as compared with 1300 fps for black powder, simultaneous ignition of all grains of black powder in the primer tube is approached, and the propellant charge will ignite and burn more uniformly.

There are other types of pyrocore for which the velocity of propagation of the flame front is even higher, the highest velocity known locally being 21,000 fps. Type 2040 pyrocore has been chosen for these studies because it gives off a considerably greater volume of burning gas than the other types. This is very important since the burning rate of a powder charge improves with an increase in pressure.

Tail Boom - The tail boom serves not only as an ignition tube for the propellant charge, but also as a rigid support for the stabilizing fins. Therefore, it is not practical to make use in this ignition system of the flexible copper mesh screen ignition tube used for rounds fired from Davy Crockett XM28 and XM29 weapons. While this latter type of tube would allow the flames from the burning black powder to pass unimpeded to the propellant charge, because of its flexibility it would not provide the rigid support for the stabilizing fins. The only practical approach to unimpeded passage of the flames is to open the wall of the tail boom as much as possible without at the same time decreasing the mechanical strength of the body of the boom.

In order to obtain the required "lattice" construction for the tail boom without at the same decreasing its mechanical strength, different designs for the tail boom have been developed. Figure 1, together with the drawings in Appendix B, show the various designs.

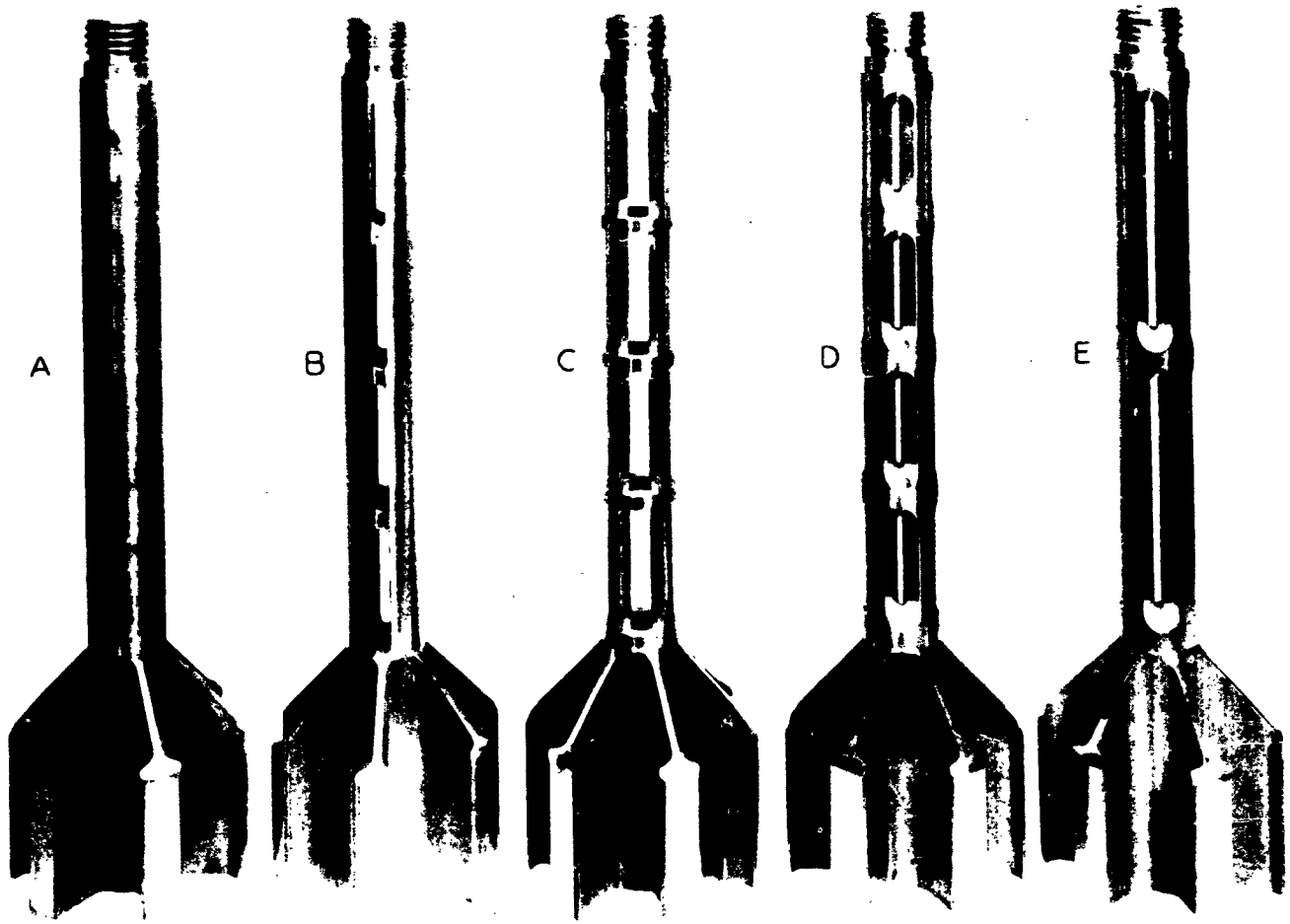

Figure 1. Various types of tail boom
A - Tail boom with a hole pattern and large central hole
B - Tail boom with sixteen narrow slots and large central hole
C - Tail boom with sixteen wide slots and large central hole
D - Tail boom with sixteen beveled slots and small central hole
E - Tail boom with eight beveled slots and small central hole

Type A (Figure 1) is the conventional boom with flash holes formed in its body. As can be seen, there are numerous blank spaces between the flash holes.

Type B (Figure 1) shows how the flash holes were eliminated and 16 narrow slots formed in the body of the boom. These slots provided greater access to the propellant charge for the flames from the burning black powder. Tail booms with 32 narrow slots (not shown in Figure 1) were also constructed.

Type C (Figure 1) shows how the narrow slots of the type B tail boom were widened in order to provide even greater access area to the flames from the burning black powder.

To obtain greater mechanical strength without at the same time diminishing the access area for the flames, tail booms were constructed using an entirely different principle. In this design, Type D (Figure 1), the diameter of the central hole extending the entire length of the body of the tail boom has been decreased to such a size that only the pyrocore explosive train can be inserted into it. In this way the thickness of the wall of the boom has been increased, with a resultant increase in the mechanical strength of the body of the boom. Sixteen short oval slots, with walls made to slant 30°, were formed in the body of the boom. (The included angle between the two walls of a given slot is 60°.) As can be seen from drawing SFC 11210 (Appendix B), the cross section of each slot is nearly that of a trapezoid, with the longer side of this trapezoid located at the surface of the body of the tail boom.

The access area for this type tail boom is large. When the pyrocore explosive train ignites, the grains of the Al black powder nearest the explosive train start to burn. The flames from these powder grains are expected to travel up and, also, to spread out laterally, due to the constantly increasing surface of the successive layers of black powder filling the slot. The access of the flames to an even greater number of grains of the propellant charge is thus improved, and since more grains will now be ignited at the same time, this will result in an improved ignition of the propellant charge.

The Type E tail boom (Figure 1) has the same construction as the type D boom except that the two outer metal rings

have been removed, resulting in eight long oval slots. This has been done in order to facilitate the manufacture and the loading of this type boom with the A1 black powder. Of course, this decreases, to some degree, the mechanical strength of the boom, but the advantages gained with the use of this design outweigh the disadvantage of the slight decrease in the mechanical strength.

It is possible to increase, even more, the access area of the type D or E tail boom by increasing the angle of inclination of the walls of the slot. This increase must be of such a magnitude that the mechanical strength of the body of the tail boom is not decreased. For these studies, the 30° angle was chosen so that the strength of the tail boom would not be diminished. For aluminum alloys having higher yield strengths, this angle could be increased in order to obtain greater access area.

Ignition of the Explosive Train - In the ignition method developed for the Davy Crockett XM28 and XM29 recoilless weapons, the pyrocore explosive train was exploded by means of an X257H electric detonator. However, the 90 mm M67 recoilless gun was designed to fire its propellant charge by percussion means, using, for this purpose, a spring-actuated plunger and a percussion primer (used in caliber .30 ammunition). Therefore, it was necessary to develop a method to ignite the pyrocore explosive train by means of percussion.

It has been found that when an M47 detonator (which contains a mixture of lead azide and lead styphnate) was interposed between one end of the pyrocore and the firing pin, the pyrocore could be ignited by the explosion of the M47 detonator. To make certain that this detonator always exploded on impact from the firing pin, the rounded point at the end of the firing pin was made sharp (Figure 2A). This slight modification lessened the chances of misfire.

An experimental lead azide explosive train, made especially for this work by the duPont company, was also evaluated for comparison with the pyrocore explosive train. It was found that it was possible to ignite the lead azide train by means of lead styphnate percussion primers, thus eliminating the need for the M47 detonator. Percussion primers (lead styphnate) used in the caliber .30 and .50 ammunition were tested and found to fire satisfactorily the lead azide explosive train. In the current work, the first primer

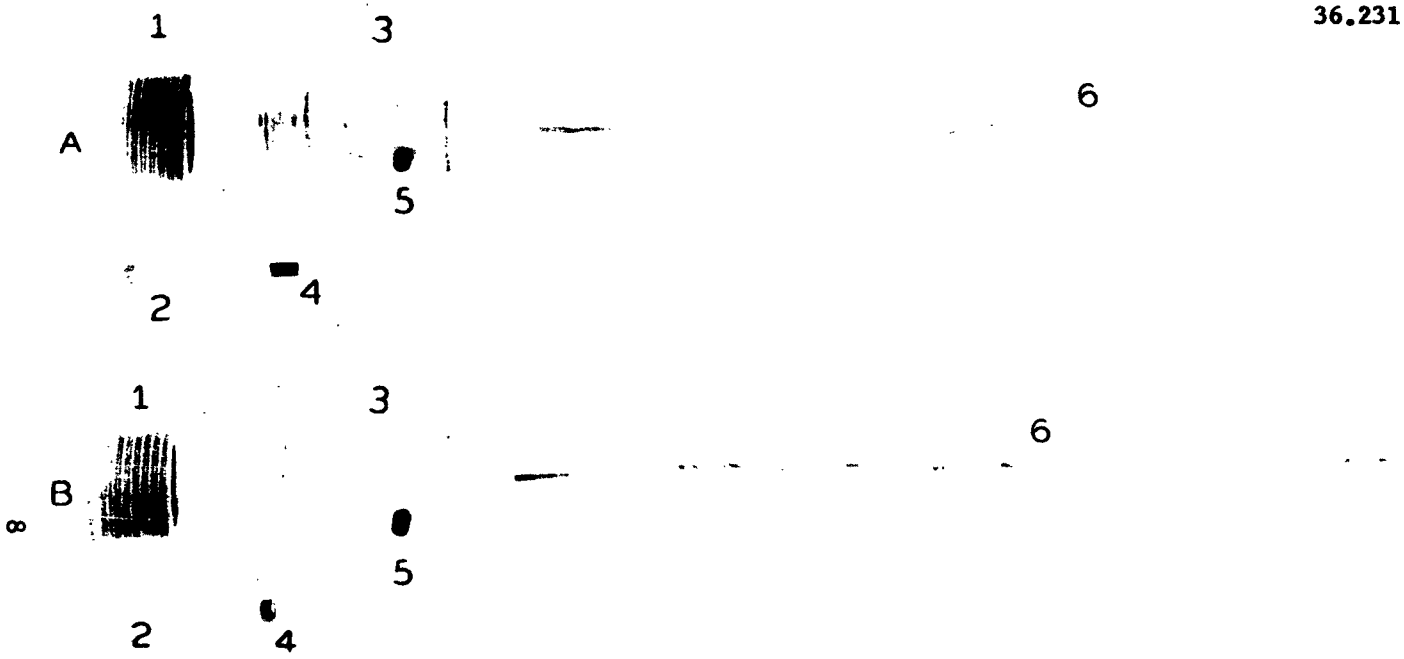

A-1. Outer housing
2. Firing pin with sharp point
3. Inner housing
4. M47 detonator
5. Set screw
6. Pyrocore explosive train

B-1. Outer housing
2. Firing pin with blunt point
3. Inner housing
4. Percussion primer
5. Set screw
6. Lead azide explosive train

Figure 2. Explosive train and primer housing components

(the .30) was used to fire the lead azide train and the propellant charge. The use of the percussion primer also eliminated the need for a sharp point at the end of the firing pin since the rounded point satisfactorily initiated the percussion primer.

Figure 2 shows the component parts of the primer system for both types of explosive train; Figure 3 shows the assembly of these parts. Figure 4 shows these assemblies used with paper primer ignition tubes containing A1 black powder; Figure 5 shows the assembly of the entire primer system for both types of explosive train. A paper primer tube used with a tail boom having a large diameter central hole in shown in Figure 6.

Figure 7 shows a longitudinal cross section of the type E tail boom. As can be seen from this picture, only the explosive train is inserted into the central hole. The A1 black powder is loaded into the slots from the outside of the tail boom. (Also shown in Figure 7, below the longitudinal cross section of the tail boom, is a plastic container developed especially for loading the black powder into this type tail boom.)

Plastic Container - The use of a tail boom with a small diameter central hole made it necessary that some suitable method be developed for loading the slots of the tail boom with the black powder. At first this loading was accomplished by filling each row of four slots with black powder and sealing the entire row with scotch tape, rotating the body of the tail boom until the next row of four slots was exposed, filling these slots with black powder, sealing the row, etc., until all four rows of the tail boom were loaded and sealed.

To simplify the procedure of filling the slots with black powder and sealing them, a special plastic container (shown in Figure 7) was developed for the type E tail boom. A complete description of the method of manufacture, as well as the way in which the container was used in loading type E tail booms with black powder, follows.

Figure 8 shows the equipment employed in making the plastic container. A male die (Figure 8A) was used to vacuum mold a polyethylene sheet (Figure 8B), 0.006 inch thick, into the plastic container shown in Figure 8C. The pockets of this container have been made to conform to the physical dimensions of the slots formed in the body of the type E tail boom. These pockets have been made in order to hold the A1 black powder in place.

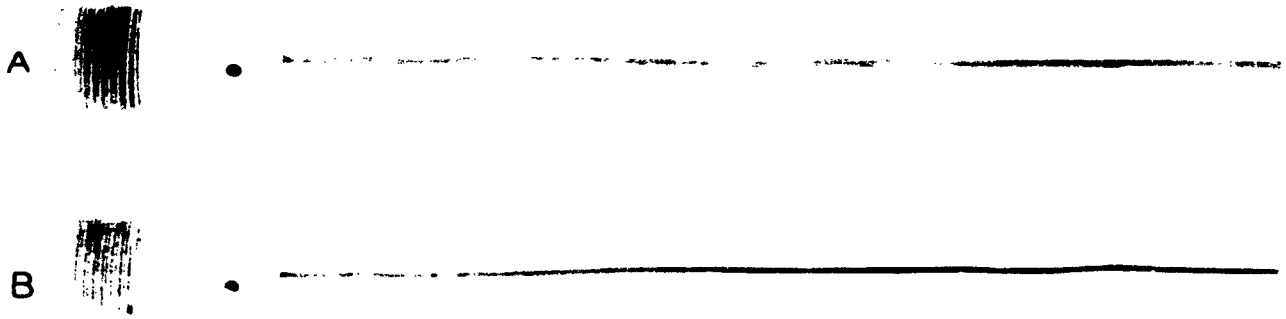

Figure 3. Assembly of Primer Housing and Explosive Train
A - Pyrocore Explosive Train
B - Lead Azide Explosive Train

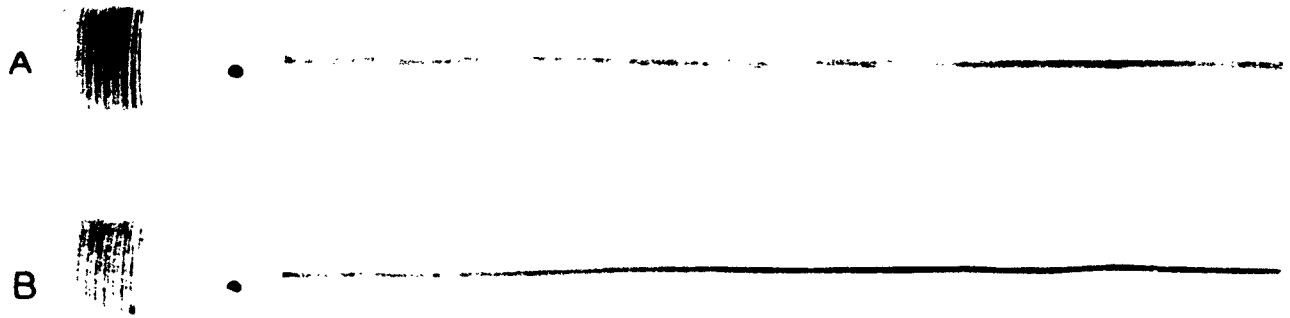

Figure 3. Assembly of Primer Housing and Explosive Train
A - Pyrocore Explosive Train
B - Lead Azide Explosive Train

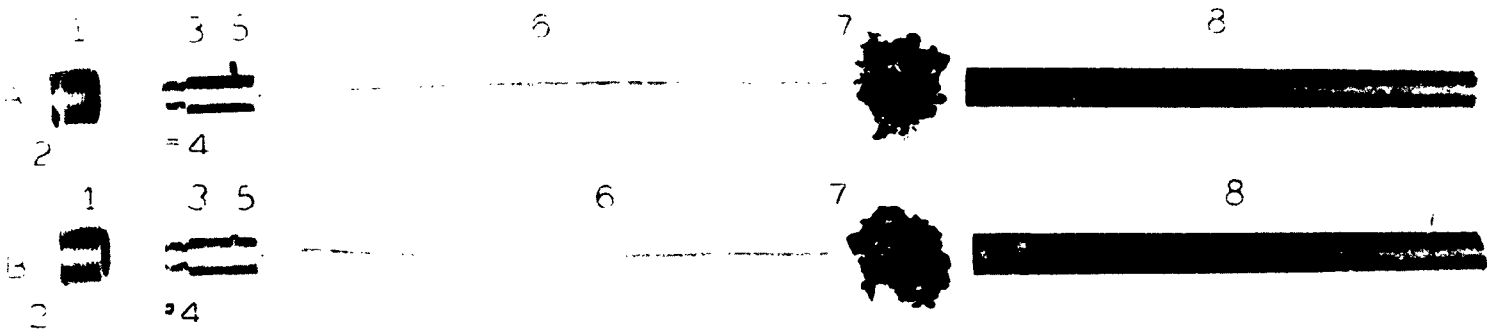

A-1. Outer housing
2. Firing pin with sharp point
3. Inner housing
4. M47 detonator
5. Set screw
6. Pyrocore explosive train
7. Al black powder
8. Paper primer tube

B-1. Outer housing
2. Firing pin with blunt point
3. Inner housing
4. Percussion primer
5. Set screw
6. Lead azide explosive train
7. Al black powder
8. Paper primer tube

Figure 4. Exploded view of primer tubes used with tail booms having large central hole

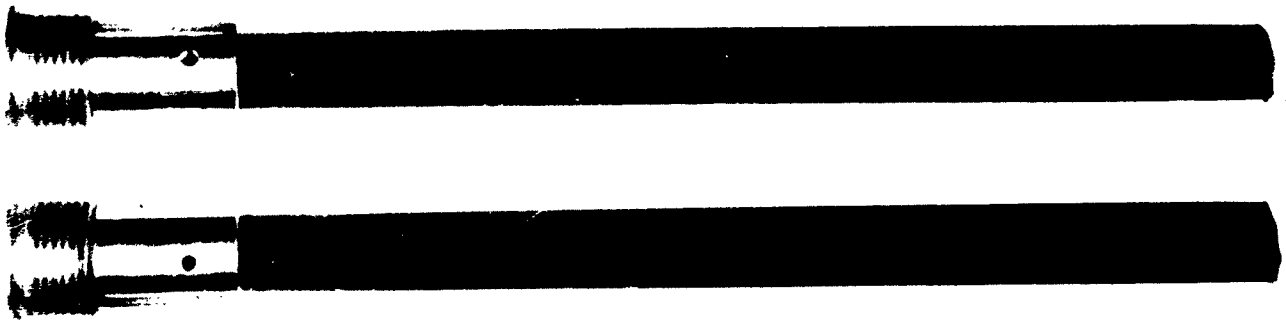

Figure 5. Assembled Primer Tubes
A - Primer Tube with Pyrocore Explosive Train
B - Primer Tube with Lead Azide Explosive Train

Figure 6. Primer Tube partially inserted into Type C Tail Boom

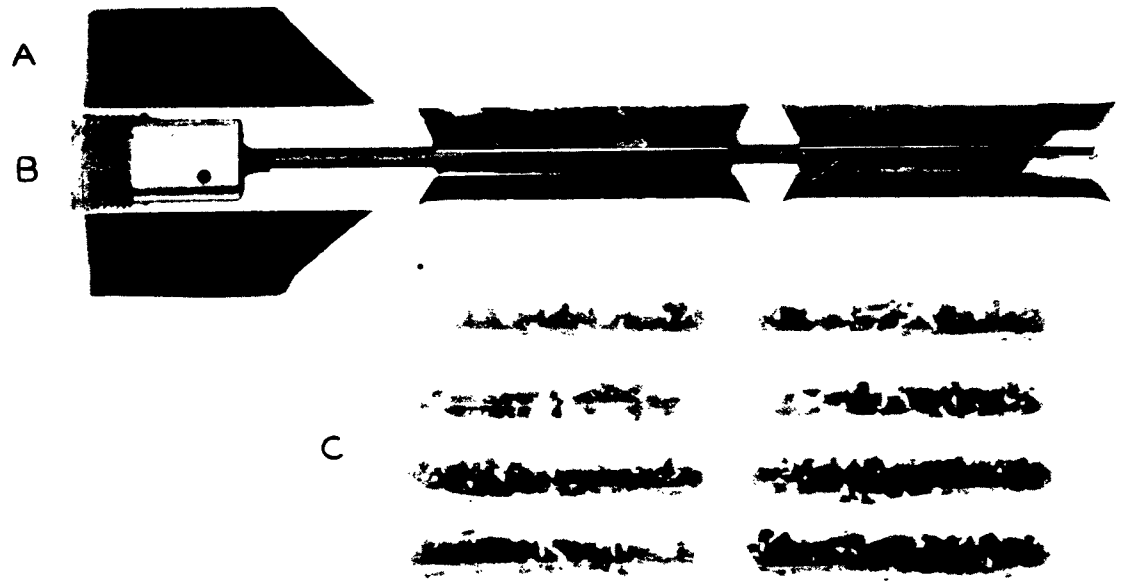

Figure 7. Longitudinal cross section of Type E Tail Boom indicating Component Parts of the new design
A - Tail Boom
B - Primer Housing with Explosive Train
C - Plastic Container filled with Al Black Powder

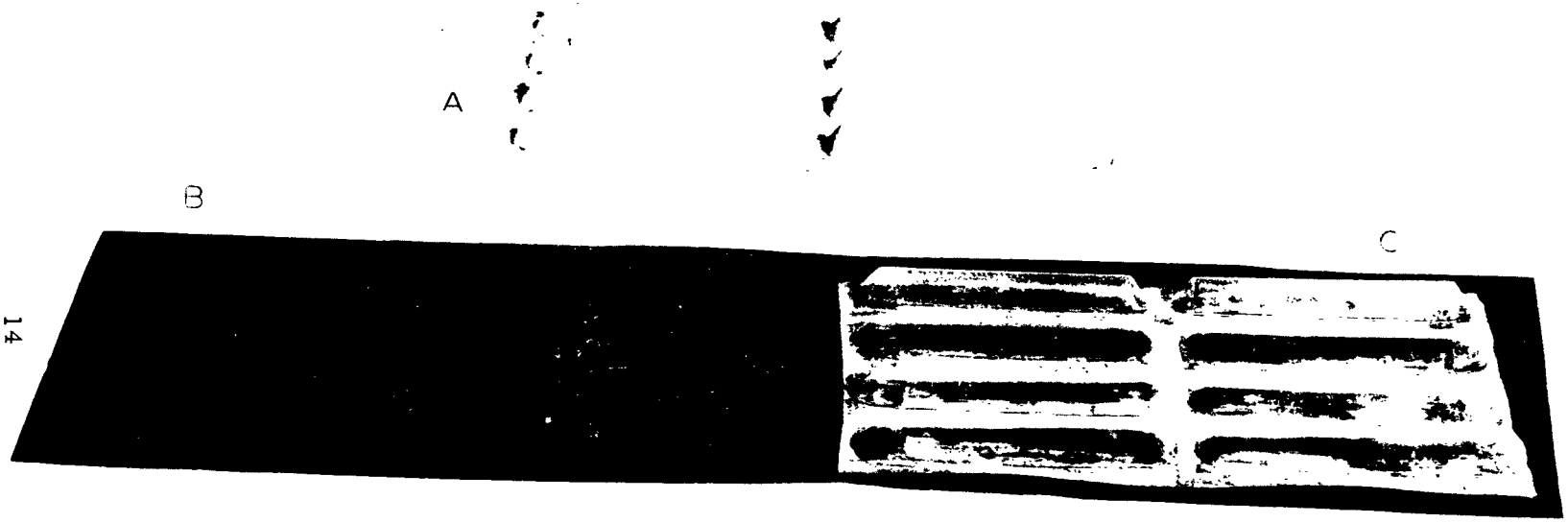

Figure 8. Equipment used to Mold Plastic Containers
A - Male Die
B - Polyethylene Sheet used for Container
C - Molded Container

The steps taken to load the type E tail boom with A1 black powder follow.

Step 1 - A female die (Figure 9) is used to supply a rigid support when loading the flexible plastic container.

Step 2 - The plastic container is inserted into the female die (Figure 10).

Step 3 - The plastic container is filled with A1 black powder (Figure 11).

Step 4 - Figure 12A shows how the plastic container is sealed by means of a pressure-sensitive polyethylene sheet. The sheet is placed upon the plastic container and a slight pressure is applied to it by hand. This causes the sheet to adhere to the flat parts of the container. The long edges of the pressure-sensitive sheet extend somewhat beyond the long edges of the plastic container. When the container (Figure 12B) is removed from the die and one row of the loaded pockets is inserted into the slots forming a row in the body of the tail boom (Figure 13), one of these extended edges is made to adhere to the metal part separating two adjacent rows. This prevents the container from moving as it is being wrapped around the body of the boom. The next row of loaded pockets is inserted into the slots of the next row in the body of the tail boom, until the entire container is wrapped around the boom. The second extended edge of the pressure-sensitive polyethylene sheet will then lap the first edge. Pressure, applied by hand, will make this edge adhere to the top of the same sheet, thus forming a lap joint (Figure 14). This will prevent the plastic container from moving in any direction.

In this way a compact package is obtained which provides uniform loading of the black powder and, at the same time, prevents moisture in the air from affecting the burning characteristics of the black powder. Figure 15 shows the component parts of the entire propellant package; Figures 16 and 17 show the assembled propellant package joined to a 90 mm slug, and the complete 90 mm round, respectively.

Distribution of the Propellant Charge - In the previous ignition system, the propellant charge was usually placed in the back of the tail boom, near the stabilizing fins. In the new ignition

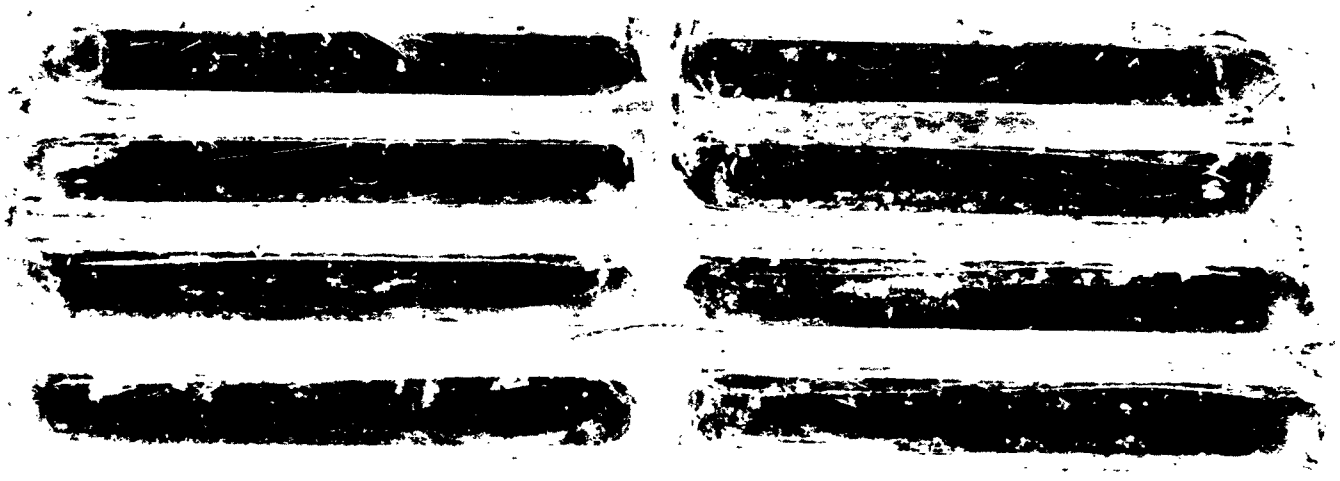

Figure 9. Female Die used to load Plastic Container with Al Black Powder

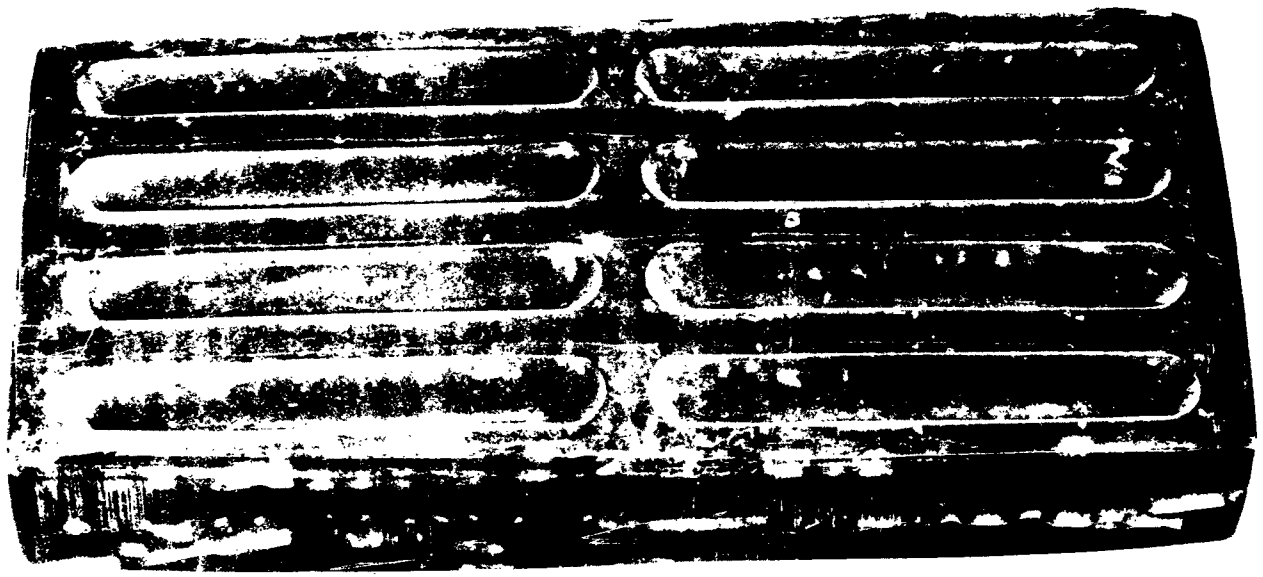

Figure 10. Plastic Container Inserted into the Female Die

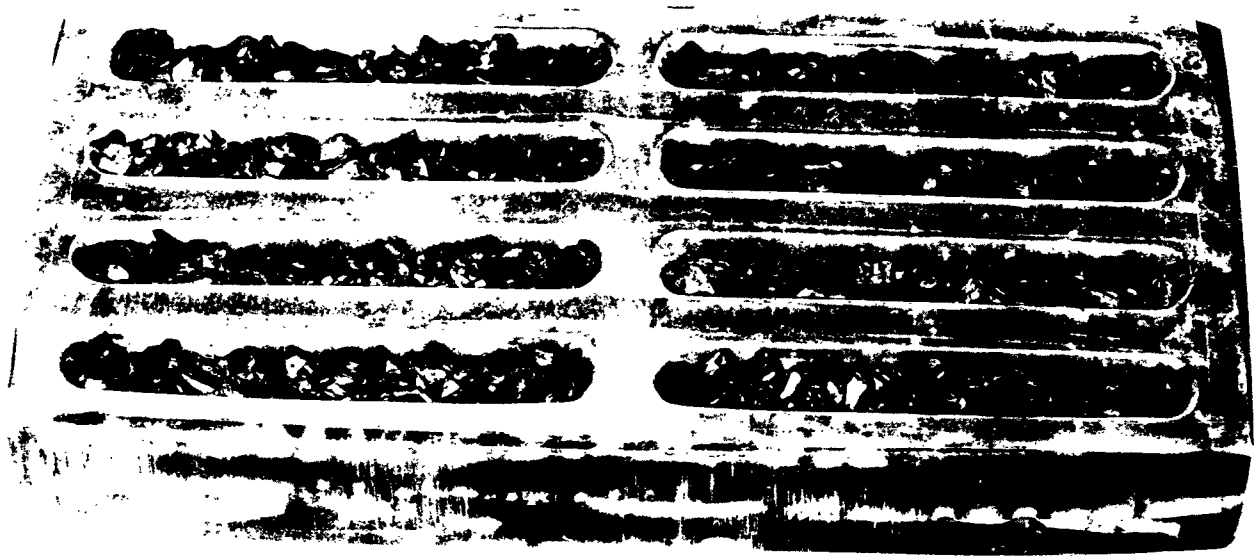

Figure 11. Plastic Container filled with Al Black Powder

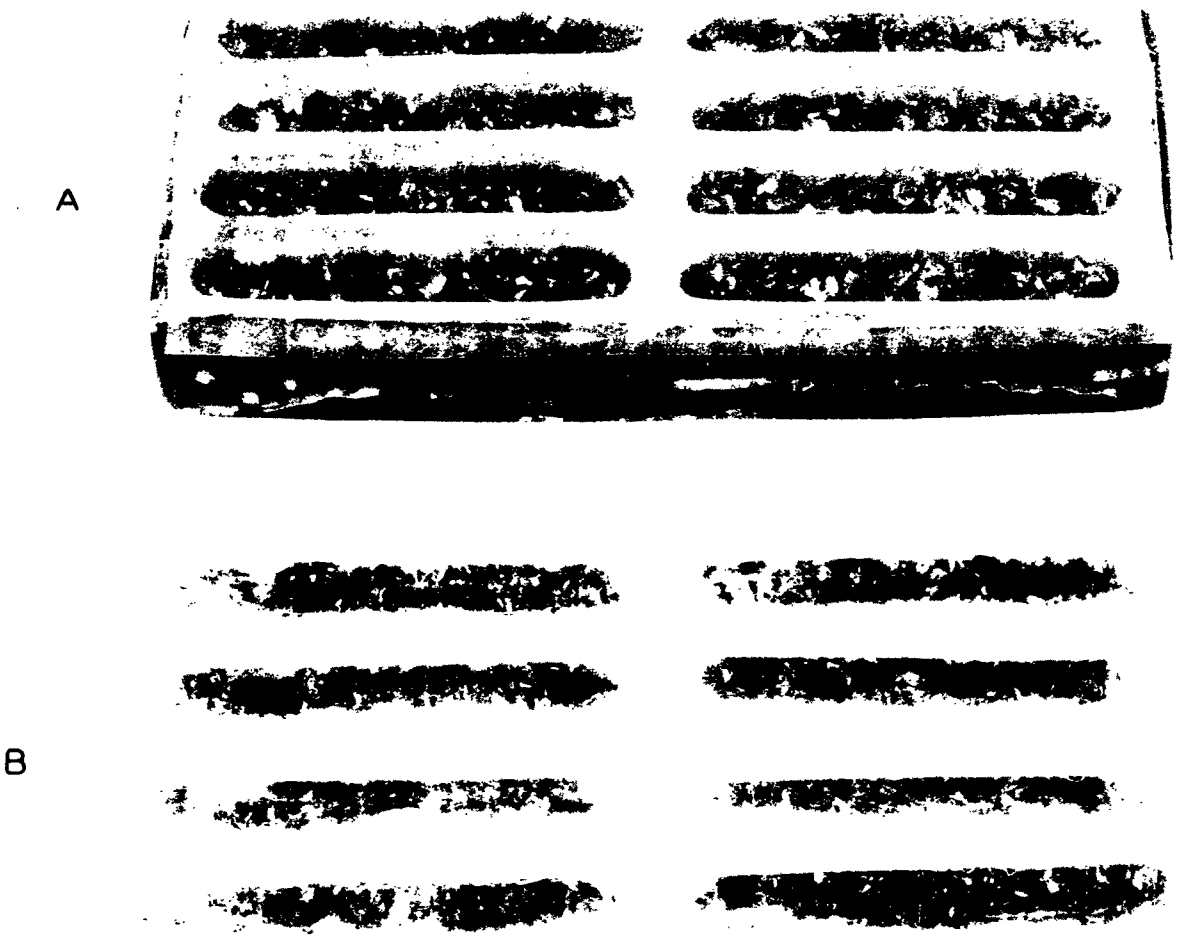

Figure 12. Sealed Plastic Container
A - Pressure Sensitive Polyethylene Sheet covering the Black Powder
B - Loaded Plastic Container removed from the Female Die

36.231.S5337/ORD.61

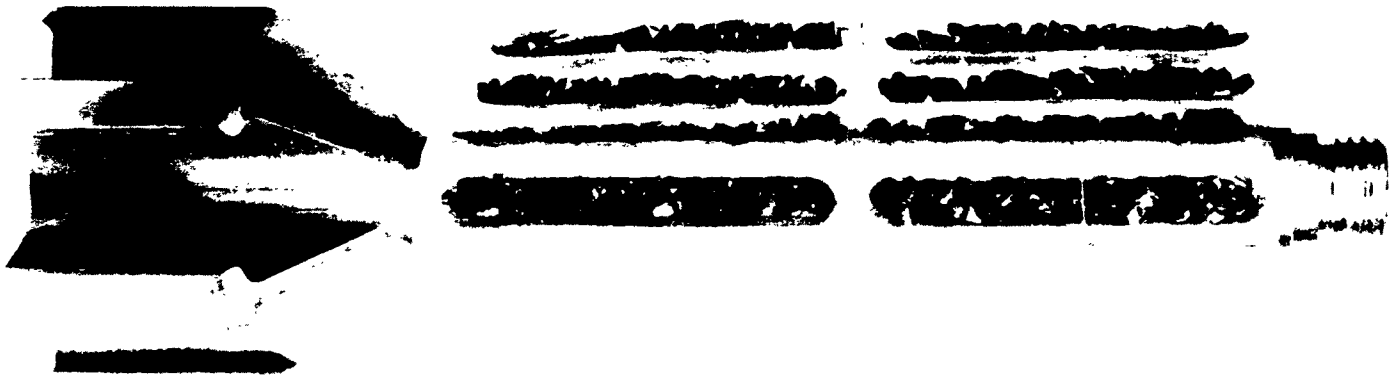

Figure 13. Plastic Container partially wrapped around Type E Tail Boom

36.231.S5338/ORD.61

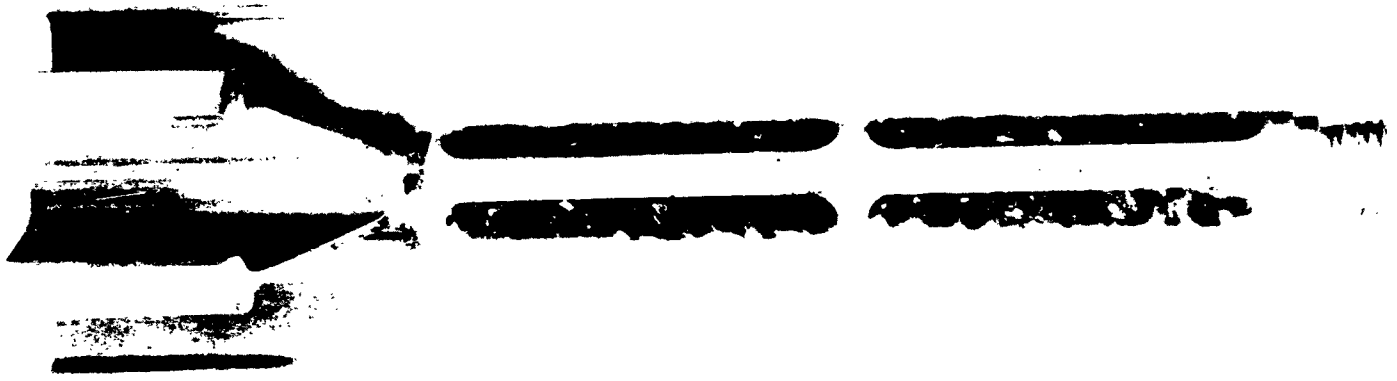

Figure 14. Plastic Container completely wrapped around Type E Tail Boom

Figure 15. Component parts of the Propellant Package
A - Type E Tail Boom loaded with A1 Black Powder
B - Cardboard Container for Propellant Charge
C - Propellant Charge

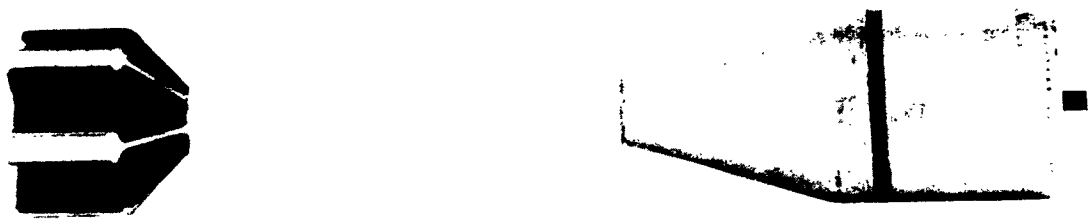

Figure 16. Assembled Propellant Package joined to the Slug

Figure 17. Complete 90 mm Round

system, the propellant charge is spread uniformly over the entire length of the body of the tail boom (Figure 16). In this way full advantage is taken of the "lattice" structure of the body of the tail boom. The flames from all the grains of the burning black powder are able to reach all the grains of the propellant charge and ignite them at approximately the same time.

DISCUSSION

Tests were conducted using a 5.97 lb 90 mm slug as the projectile and 0.026 in. web M5 MP propellant and the following ignition systems. Results are presented in Table 1.

Ignition System	Components
1	Firing pin with blunt point Percussion primer Paper primer tube 640 gr A1 black powder Tail boom with pattern of holes and large central hole (type A)
2	Firing pin with sharp point M47 detonator Pyrocore explosive train, type 2040 Paper primer tube 640 gr A1 black powder Tail boom with pattern of holes and large central hole (type A)
3	Firing pin with sharp point M47 detonator Pyrocore explosive train, type 2040 Paper primer tube 640 gr A1 black powder Tail boom with 16 narrow slots and large central hole (type B)

Ignition System	Components
4	Firing pin with blunt point Percussion primer Paper primer tube 640 gr A1 black powder Tail boom with 16 narrow slots and large central hole (type B)
5	Firing pin with sharp point M47 detonator Pyrocore explosive train, type 2040 640 gr A1 black powder Tail boom with 32 narrow slots and large central hole (mod type B)
6	Firing pin with sharp point M47 detonator Pyrocore explosive train, type 2040 640 gr A1 black powder Tail boom with 16 beveled slots and small central hole (type D)
7	Firing pin with sharp point M47 detonator Pyrocore explosive train, type 2040 640 gr A1 black powder Tail boom with 8 beveled slots and small central hole (type E) Plastic container for black powder
8	Firing pin with sharp point M47 detonator Pyrocore explosive train, type 2040 640 gr A1 black powder Tail boom with 8 beveled slots and small central hole (type E)
9	Firing pin with blunt point Percussion primer Lead azide explosive train 640 gr A1 black powder Tail boom with 8 beveled slots and small central hole (type E)

TABLE I. Data Obtained with the 90 mm M67 Weapon System, Using Various Methods of Ignition

(Projectile: 90 mm Slug, 5.97 lb; Propellant: M5 MP, 0.026 in. web)

Propellant Weight (lb)	Temperature (°F)		Peak Chamber Pressure[a] (psi)			Velocity (fps)			Recoil
			Sta 1	Sta 2	Sta 3	Muzzle	Spread	Std Dev	
					Ignition System 1				
1.5	70		4680	7000	7380	749			+12
			4800	6700	7660	716			+8
			4680	6800	7310	738			+10
			4560	6620	7430	729	33	11.29	+8
			4950	7160	8370	741			+11
			4740	6620	7070	735			+10
		Avg			7537	734.7			
					Ignition System 2				
1.5	70		5980	6660	7360	759			+10
			5370	6500	8280	763			+10
			5030	6180	7820	762			+11
			-	-	7280	762			+10
			5480	7550	7880	770	27	9.21	+10
			5990	7560	8380	783			+12
			5660	6880	7780	776			+10
			5870	6900	7520	756			+9
		Avg			7788	766.4			
					Ignition System 3				
1.5	70		5900	7300	9300	781			+4
			5565	7840	8335	779			+3
			6175	7940	9460	785			+3
			5800	7700	9440	787			+3
			5850	7900	9190	770	17	6.02	+3
			5745	7600	9375	775			+3
			5995	7880	9545	785			+3
			5675	7820	9270	786			+3
		Avg			9239	781.0			
1.45	70		3730	6520	6900	729			+3
			4220	6720	6700	737	8		+2.5
		Avg			6800	733			
					Ignition System 4				
1.5	70		4100	4910	-	692			+8
			4080	4295	4720	625			+8
			4600	4635	4595	660			+8
			4180	5000	5590	699			+6
			4120	-	-	694	96	29.21	+6
			4120	5485	6130	696			+7
			4240	5995	6130	721			+7
			4680	5780	5560	688			+8
		Avg			5454	684.4			
1.4	70		3580	4230	5375	623			+3
			3700	4370	4595	634			+9
			3340	-	-	603			+1
			3440	3410	5130	601			+2
			3260	-	-	629	45	15.21	+6
			3400	4400	4595	614			0
			3220	4480	4750	589			-5
			3480	4525	4950	615			+3
		Avg			4899	613.5			

[a]Station 1 - piezo gage, located on the chamber of the gun, 1-1/2 inches from the rear of the nozzle.
Station 2 - copper gage, located on the chamber of the gun, 4-1/2 inches from the rear of the nozzle.
Station 3 - piezo gage, located on the chamber of the gun, 5-1/2 inches from the rear of the nozzle.

TABLE I. Data Obtained with the 90 mm M67 Weapon System, Using Various Methods of Ignition (Cont'd)

Propellant Weight (lb)	Temperature (°F)		Peak Chamber Pressure[a] (psi) Sta 1	Sta 2	Sta 3	Velocity (fps) Muzzle	Spread	Std Dev	Recoil
				Ignition System 5					
1.5	70		5530	7560	8630	-			+10
			5670	7460	8900	788			+10
			7050	7400	9880	788			+10
			7350	7440	8780	795	14	4.88	+10
			7100	7860	9570	786			+11
			7180	7900	8560	783			+8
			7250	7640	9590	781			+8
		Avg			9130	786.8			
				Ignition System 6					
1.45	70		3800	5380	6150	670			-
			4140	5300	5920	673	18	8.43	+9
			4020	5460	6070	688			+8
			3550	5340	5840	671			+6.5
		Avg			5995	675.5			
1.45	125		3980	5880	6940	717			+8
			4530	6260	6860	722			+7.5
			4470	6180	7030	725	22	7.02	+9.5
			4460	5960	7000	723			+9.5
			4710	6380	7480	736			+9.5
			4650	6320	7240	739			+10.0
		Avg			7062	727.0			
				Ignition System 7					
1.45	70		3820	5440	5950	683			+2.75
			3730	5620	6050	682	4	2.83	+2.5
			3720	5600	6290	685			+3
			3640	5420	5570	686			+3
		Avg			5965	684			
				Ignition System 8					
1.45	70		3720	5920	6080	689			+3
			3730	5840	6040	699	26	13.11	+2.5
			3420	5080	5450	673			+3
		Avg			5857	687			
				Ignition System 9					
1.45	70		3620	4860	5010	668			+6.5
			3760	4720	5500	651			+3.5
			3370	4540	5190	647			+3.5
			3400	4640	5300	653	29	10.97	+3.0
			-	5300	5710	676			+3
			3420	4820	5190	649			+3
			3140	4860	5260	652			+3
		Avg			5309	656.6			

[a]Station 1 - piezo gage, located on the chamber of the gun, 1-1/2 inches from the rear of the nozzle.
Station 2 - copper gage, located on the chamber of the gun, 4-1/2 inches from the rear of the nozzle.
Station 3 - piezo gage, located on the chamber of the gun, 5-1/2 inches from the rear of the nozzle.

Pyrocore-Black Powder Combination vs Al Black Powder

Results obtained (Table I) using ignitions systems 1 and 2 show an appreciable increase in muzzle velocity when the pyrocore-black powder combination was used instead of black powder to fire the propellant charge. A summary of these results follows.

Ignition system	1	2
Method of ignition	BP	Pyrocore-BP
Weight of propellant charge (lb)	1.5	1.5
Avg peak chamber pressure (psi)	7537	7788
Avg muzzle velocity (fps)	734.7	766.4
Velocity spread (fps)	33	27
Standard deviation (fps)	11.29	9.21
Sample size (no. of rounds)	6	8

From these results it appears that even though the access area for the two different methods of ignition remained the same, the propellant charges were ignited and burned more uniformly when the pyrocore-black powder combination was used in place of the black powder.

Tail Boom with 16 Slots

As has been mentioned previously, it was thought that even better ignition and, therefore, more consistent ballistic results, could be obtained when the pyrocore-black powder combination was used if the body of the tail boom could be opened even more than was possible with a pattern of flash holes. Comparison of the results of ignition system 2 and 3 tests (Table I) indicated that this concept was correct. The use of the 16-slot tail boom indicated an improved velocity uniformity for system 3. This, however, was not true when system 4 (no explosive train) was used. Comparative results obtained for systems 2, 3, and 4 (Table I) follow.

To determine the upper limit in the magnitude of the access area that could be obtained, type C (16 wide slots) tail boom was constructed. The body of this type of tail boom was almost completely open. On all firings of the 90 mm M67 gun, the bodies of the tail booms broke while they were in the gun.

Ignition System	2	3	4	
Method of ignition	Pyrocore-BP	Pyrocore-BP	BP	BP
Wt of propellant charge (lb)	1.5	1.5	1.5	1.4
Avg peak chamber pressure (psi)	7788	9239.4	5454	4899
Avg muzzle velocity (fps)	766.4	781.0	684.4	613.5
Velocity spread (fps)	27.0	17.0	96.0	45.0
Standard deviation (fps)	9.21	6.02	29.21	15.21
Sample size (no. of rounds)	8	8	8	8

Tail Boom with 32 Narrow Slots

The type B tail boom was then modified to have 32 narrow slots. The velocity uniformity appeared to be even better than that obtained for tail booms having 16 narrow slots. A summary of the results obtained for ignition systems 3 and 5 (Table I) follows.

Ignition system	3	5
Method of ignition	Pyrocore-BP	Pyrocore-BP
Number of slots	16	32
Avg peak chamber pressure (psi)	9239.4	9130
Avg muzzle velocity (fps)	781.0	786.8
Velocity spread (fps)	17.0	14.0
Standard deviation (fps)	6.02	4.88
Sample size (no. of rounds)	8	7

When using tail booms having 32 slots, it was found that occasionally some of the booms broke when the gun was fired. This indicated that the mechanical strength of a 32-slot tail boom was less than that of a tail boom having 16 slots.

Since it was essential that no tail booms should fail and, also, since only tail booms with 16 narrow slots proved to be 100 percent reliable, other methods had to be found by means of which an appreciable increase in the access area could be obtained without at the same time decreasing the strength of the body of the tail boom. There were three possible solutions to this problem, viz.:

(1) To use an aluminum alloy or other suitable material having a higher yield strength than the aluminum presently being used for manufacturing the 90 mm tail booms.

(2) To decrease the weight of the propellant charge so as to decrease peak chamber pressure, and therefore, stress on the body of the tail boom.

(3) To design the body of the tail boom in such a way as to obtain a large access area without at the same time diminishing the mechanical strength of the body of the tail boom.

The use of an aluminum alloy which has better physical characteristics (mechanical strength) than the aluminum alloy presently being used (i.e., the 24ST4) would permit the use of either the 32-slot tail boom or the type C boom with its almost completely open body. However, since such an aluminum alloy was not available,* this obvious solution could not be applied to the present problem.

In all studies described in this work it has been observed that an increase in the access area to the propellant charge was always followed by an increase in the peak chamber pressure in the gun. The maximum permissible peak chamber pressure for the 90 mm M67 prototype gun is only 7780 psi. As can be seen from the results presented in Table I, this peak chamber pressure was exceeded on numerous occasions. Although for these studies a test gun was used with a much higher rated peak chamber pressure, it was decided that by decreasing the weight of the propellant charge to a suitable value, the peak chamber pressure would be reduced to a value below the peak pressure of 7780 psi.

To correlate the results obtained for propellant charges weighing 1.5 lb with those obtained at the lower weight, several 90 mm rounds were fired using tail booms with 16 narrow slots. Data obtained are tabulated in Table I (Ignition System 3); average results obtained follow.

			Difference
Propellant charge (lb)	1.5	1.45	0.05
Peak chamber pressure (psi)	9239	6800	2439
Muzzle velocity (fps)	781	733	48

*Such aluminum alloys can be made, but were not available for this work at that time.

As can be seen from these results, a decrease of 0.05 lb of propellant charge resulted in a considerable decrease in the peak chamber pressure and muzzle velocity for this type tail boom. Since tail booms with 32 slots or those with completely open bodies (type C) were not available, no definite conclusions could be reached on the effect of the decrease in the peak chamber on these types of tail boom. However, with such a decrease in the peak chamber pressure, it would seem that the above tail booms could withstand the imposed stresses. More work will have to be done using this approach.

The third solution - that of using a tail boom designed on an entirely new principle - has resulted in valuable results, especially for the rounds where use has been made of a special plastic container. As can be seen from the results obtained for a limited number of rounds (Ignition Systems 7 and 8, Table I), although the average peak chamber pressures and muzzle velocities for both groups were nearly the same, the velocity uniformity for the rounds in which the plastic container had been used was found to be very good, the standard deviation being 1.83. However, the limited sample size plus the poor uniformity of the chamber pressure at station 3 (good uniformity of chamber pressure was obtained at station 1) indicate that a considerably larger number of rounds will have to be fired before definite conclusions can be drawn.

The velocity uniformity for the rounds for which no plastic containers have been used appears to be rather poor, the standard deviation being 13.11. An analysis of the results obtained for these rounds shows that for the first two rounds, the peak chamber pressures were 6080 and 6040 psi with muzzle velocities of 689 and 699 fps, respectively. The peak chamber pressure for the third round decreased to 5450 psi and the muzzle velocity to 673 fps.

As can be seen from the results (Table I), the muzzle velocities obtained when the new types of tail boom (type D or E) were used were lower than those obtained for the 16- and 32-slot tail booms. The difference in the results was probably due to the fact that for a 16- or 32-slot tail boom, the black powder completely surrounded the pyrocore and was in intimate contact with the explosive train. In fact, the pyrocore extended through the center and along the entire length of the column of black powder. In the new types of tail boom, the pyrocore was not in intimate contact with the black powder and the black powder was arranged in four longitudinal segments. This may account for the observed difference in the results.

However, this should cause no concern since a moderate increase in the weight of the propellant charge will increase the muzzle velocity to the desired value. This can be accomplished without any serious damage to the prototype gun since the peak chamber pressures obtained for types D and E tail boom were found to be considerably under the allowed peak chamber pressure of 7780 psi for the 90 mm M67 prototype gun. The new design for the tail boom should also result in a greater capacity to withstand an additional increase in the peak chamber pressure.

It is indicated that the solutions discussed could be combined in such a way that much higher muzzle velocities could be obtained, together with good velocity uniformity.

Lead Azide Explosive Train

Experimental studies have also been conducted with a lead azide explosive train as a substitute for the pyrocore in the new ignition system with the object of determining the feasibility of its use for recoilless guns.

Measured peak chamber pressures and muzzle velocities obtained when the lead azide explosive train was used were lower than those obtained when pyrocore was employed in the new ignition system (systems 7, 8 and 9, Table I). The ignition time delays for all rounds fired by means of the lead azide explosive train were found to be much longer than those obtained when pyrocore was used (Figure 18). Longer ignition time delays are associated with lower peak chamber pressures and lower muzzle velocities. The longer times and their greater time variations when the lead azide explosive train was used resulted in obtaining lower peak chamber pressures and lower muzzle velocities and, also, a poorer velocity uniformity, the standard deviation (10.97 fps) being quite high.

No direct comparison can be made between the results obtained for the two types of explosive train since their characteristic and the amount of explosive material used for each train were quite different. Characteristics and the method used to initiate the explosion of each type of train follow.

	Pyrocore Explosive Train	Lead Azide Explosive Train
Flame velocity	12,000 fps	1480 fps
Explosive material	4 grains	2 grains
Method of initiation	M47 detonator	Cal .30 percussion primer

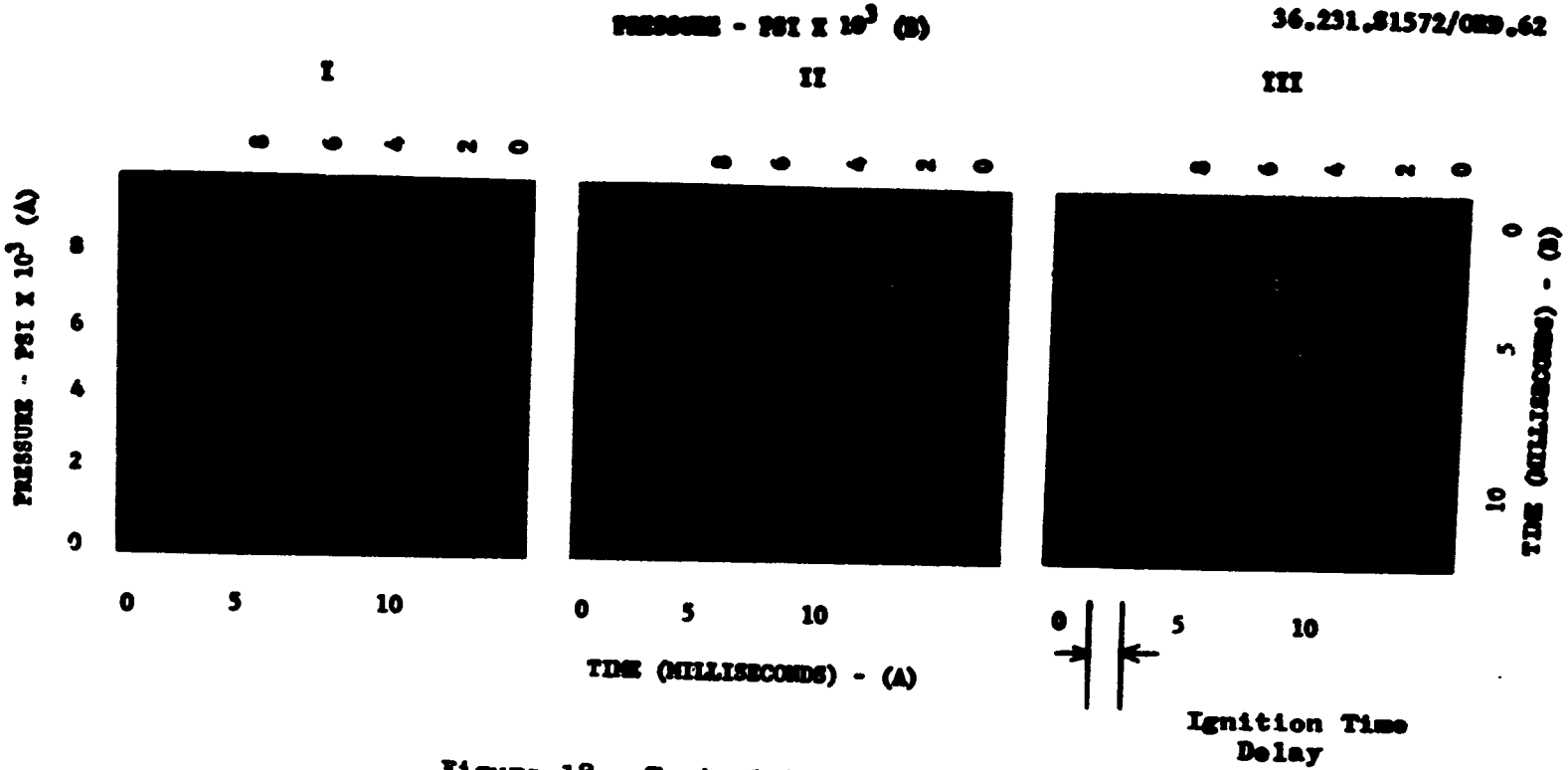

Figure 18. Typical Pressure Time Curves

I. Pyrocore explosive train used with tail boom having a large central hole (Type B).

II. Pyrocore explosive train used with tail boom having a small central hole (Type E).

III. Pyrocore explosive train used with tail boom having a small central hole (Type E) and plastic container.

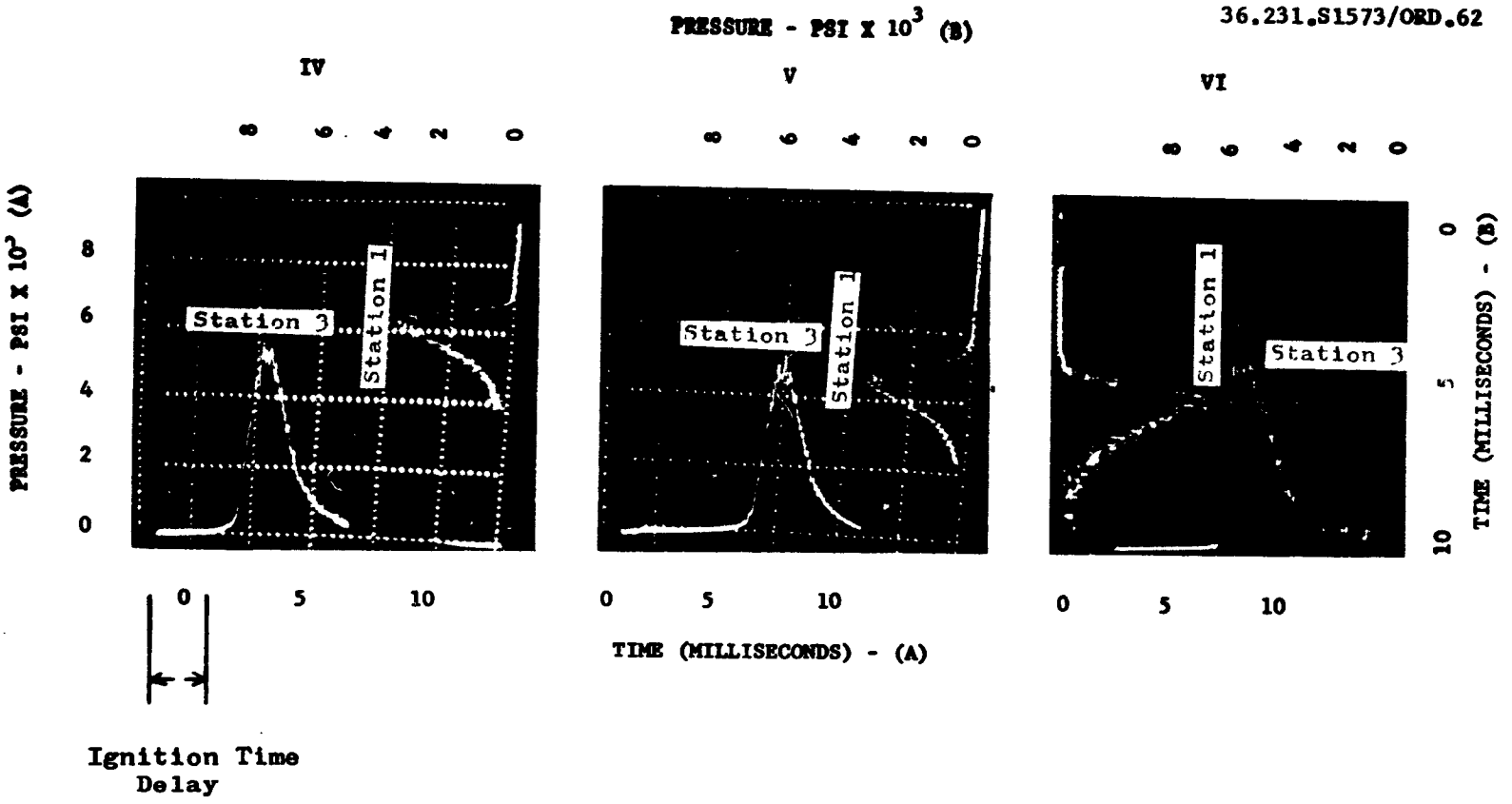

Figure 18 (Continued). Typical Pressure Time Curves

IV. Lead azide explosive train used with tail boom having a large central hole (Type B).

V. Lead azide explosive train used with tail boom having a small central hole (Type E).

VI. Old ignition system used with tail boom having flush holes (Type A).

As can be seen from this tabulation, the quantity of explosive material for the lead azide is only one-half that for the pyrocore. This will affect, appreciably, the initial burning rate of the black powder and the propellant charge. What is even more important is the fact that the velocity of the flame front for the lead azide explosive train is approximately 1/8 that for the pyrocore explosive train. According to the principles stated in the theory part of this report, this lower velocity for the flame front will greatly affect the uniformity of ignition of the propellant charge, making the ignition worse when the lead azide explosive train is used. This, of course, will result in less uniform ballistic data. The results obtained when use has been made of the lead azide explosive train prove that these conclusions are correct.

It has been found that the velocity of the flame front for the lead azide explosive train varied with the type of initiator used to set off this type of train. The following are the results obtained for the different types of initiator.

Type Initiator	Velocity of Flame Front (fps)
Caliber .30 percussion primer*	1480
Caliber .50 percussion primer**	1595
M47 detonator	2175

In this work, only the first percussion primer, the caliber .30, has been used with the lead azide explosive train. The use of an initiator with proper characteristics should increase the velocity of propagation of the flame front when a lead azide explosive train is used, thus obtaining a more uniform burning of the propellant charges and, therefore, more uniform muzzle velocities.

Summary of the Ballistic Data

From the following summary of ballistic data (Table II) obtained from Table I, it will be observed that the more open the body

*See drawings B7645332 and B8594698 for primer for caliber .30 ammunition

**See drawing B7645339 for primer for caliber .50 ammunition

of the tail boom, the greater the muzzle velocity. The velocity uniformity is constantly improving, as shown by a gradual decrease in the value of the standard deviation.

TABLE II. Summary of Ballistic Data

Ignition System	No. of Rounds	Temp (° F)	Charge Weight (lb)	Avg Peak Pressure (psi)	Muzzle Velocity (fps) Average	Spread	Std Dev
1*	6	70	1.5	7537	734.7	33	11.29
2	8	70	1.5	7788	766.4	27	9.21
3	8	70	1.5	9239	781	17	6.02
4*	8	70	1.5	5454	684.4	96	29.21
	8	70	1.4	4899	613.5	45	15.21
5	7	70	1.5	9130	786.8	14	4.88
6	4	70	1.45	5995	675.5	18	8.43
	6	125	1.45	7062	727.0	22	7.02
7	4	70	1.45	5965	684	4	1.83
8	3	70	1.45	5857	687	26	13.11
9	7	70	1.45	5309	656.6	29	10.97

*These are the previous ignition system; balance are the new systems.

CONCLUSIONS AND RECOMMENDATIONS

The principles of uniform ignition formulated for the Davy Crockett XM28 and XM29 recoilless weapon systems can be successfully applied to the 90 mm M67 recoilless gun. The standard deviations obtained for muzzle velocities in the M67 gun, when the new principles are applied, are smaller than those obtained using current ignition system practices.

Ignition system 7 (composed of the firing pin with sharp point, M47 detonator, type 2040 Pyrocore explosive train, 640 grains A1 black powder, tail boom with eight beveled slots and small central hole (type E tail boom), and plastic container for black powder) appears to embody the most advantageous application of the principles of uniform ignition. It is recommended that an engineering evaluation program be initiated to evaluate these preliminary conclusions with a larger number of rounds.

It is expected that the use of a slotted tail boom will not adversely affect the aerodynamic properties of the projectile since no change has been made in the external shape of the tail boom.

APPENDIX A

TEST RESULTS
(Aberdeen Proving Ground)

Tabulation of Chamber Pressure and Time Data, Cartridge, HEAT, T249E6

Firing dates: Test 237 through 288 - 5 Nov 59
289 through 301 - 17 Nov 59
302 through 340 - 18 Nov 59
341 through 385 - 19 Nov 59

Test No.	Rifle Round No.	Temp (° F)	Shell Weight (lb)	Muzzle Velocity (fps)	Chamber Pressure (psi) Copper (T13) Gage	Chamber Pressure (psi) CEC Gage	Ratio CEC/Cu	CEC Gage No.	Rise Time (ms)
				Propellant T28, Lot HES-5250-65, 24.0 oz					
237	136	70	6.70	672	5550	6670	1.20	1616	Lost
				Propellant M5, Lot RAD-6-57, 20.76 oz					
238	137	70	6.72	682	5000	6640	1.33	1616	Lost
				Propellant T31, Lot PAE 28174, 22.0 oz					
239	138	70	6.68	675	5100	5620	1.10	1616	0.6
240	139	70	6.68	705	4800	5410	1.13		0.6
241	140	70	6.72	675	5050	5520	1.09		0.6
242	141	70	6.69	690	5250	5980	1.14		0.5
243	142	70	6.72	674	5050	5490	1.09		0.9
244	143	70	6.68	679	4900	5780	1.18		0.5
245	144	70	6.68	669	4900	5780	1.18		Lost
246	145	70	6.68	675	4800	5510	1.15		0.6
247	146	70	6.72	692	5400	Lost			Lost
248	147	70	6.70	696	5150	5800	1.13		0.6
				Propellant T28 Lot HES-5250-65, 24.0 oz					
249	148	-50	6.72	594	4300	4910	1.14	1616	0.5
250	149	-50	6.70	619	4550	5190	1.14		0.3
251	150	-50	6.72	607	4400	5080	1.15		0.5
252	151	-50	6.70	604	4400	5200	1.18		0.5
253	152	-50	6.73	617	4550	5430	1.19		0.5
254	153	-50	6.72	582	4300	5000	1.16		0.5
255	154	-50	6.70	591	4050	4790	1.18		0.4
256	155	-50	6.70	585	4000	4730	1.18		0.5
257	156	-50	6.68	612	4100	5160	1.26		0.4
258	157	-50	6.72	608	4650	5390	1.16		0.5
				Propellant T31, Lot PAE 28174, 22.0 oz					
259	158	10	6.70	884	9250	10000	1.08	1617	0.5
260	159	10	6.73	765	5900	6640	1.13		0.4
261	160	10	6.68	789	6350	6980	1.10		0.5
262	161	10	6.68	732	5050	5990	1.19		0.4
263	162	10	6.71	730	5350	6290	1.18		0.4
264	163	10	6.70	743	5250	6330	1.21		0.3
265	164	10	6.68	800	5600	6460	1.15		Lost
266	165	10	6.70	739	5300	6360	1.20		0.4
267	166	10	6.72	715	4900	5760	1.18		0.5
268	167	10	6.72	747	5250	6300	1.20		0.3
				Propellant M5, Lot RAD-SR-6-57, 20.76 oz					
269	168	10	6.72	625	4800	5710	1.19	1617	0.4
270	169	10	6.74	627	4700	5530	1.18		0.5
271	170	10	6.73	621	4700	5620	1.20		0.6
272	171	10	6.75	638	5050	5710	1.13		0.4
273	172	10	6.74	635	4950	5770	1.17		0.5
274	173	10	6.73	620	4850	5540	1.14	1615	0.4
275	174	10	6.71	631	4700	5570	1.19		0.4
276	175	10	6.74	614	4750	5760	1.21		0.5
277	176	10	6.71	621	4350	5450	1.25		0.4
278	177	10	6.72	626	4750	5430	1.14		0.5
				Propellant T28, Lot HES-5250-65, 24.0 oz					
279	178	10	6.72	634	4900	5700	1.16	1615	0.5
280	179	10	6.74	609	4900	5690	1.16		0.4
281	180	10	6.73	626	4700	5450	1.16		0.4
282	181	10	6.72	653	5000	6090	1.22		0.3
283	182	10	6.72	642	4950	5990	1.21		0.3
284	183	10	6.70	643	4850	5720	1.18		0.4
285	184	10	6.70	661	4950	5860	1.18		0.4
286	185	10	6.72	632	4700	5640	1.20		0.4
287	186	10	6.72	650	4700	5750	1.22		0.4
288	187	10	6.71	650	4900	6040	1.23		0.3

Test No.	Rifle Round No.	Temp (° F)	Shell Weight (lb)	Muzzle Velocity (fps)	Chamber Pressure (psi) Copper (T13) Gage	Chamber Pressure (psi) CEC Gage	Ratio CEC/Cu	CEC Gage No.	Rise Time (ms)
				Propellant M5, Lot RAD-8R-6-57, 20.76 gs					
289	188	70	6.70	682	Lost	Lost		1614	Lost
290	189	70	6.66	685	5350	6410	1.20		0.5
291	190	70	6.70	680	5850	6690	1.14		0.3
292	191	70	6.72	677	5350	6750	1.26		0.4
293	192	70	6.72	673	5350	6520	1.22		0.4
294	193	70	6.70	678	5250	Lost			Lost
295	194	70	6.70	678	5750	6860	1.19		0.4
296	195	70	6.66	714	5600	6790	1.21		0.4
297	196	70	6.73	665	5050	6190	1.23		0.4
298	197	70	6.72	680	5400	6750	1.25		0.4
299	198	160	6.71	723	6300	7590	1.20	1614	0.4
300	199	160	6.83	741	6500	8380	1.29		0.4
301	200	160	6.71	728	5400	7650	1.42		0.4
302	201	70	6.68	680	5400	6280	1.16	1614	0.5
303	202	70	6.72	671	5400	6500	1.20		0.5
304	203	160	6.72	728	6600	7740	1.17	1614	0.4
305	204	160	6.71	755	6700	7780	1.16		0.4
306	205	160	6.85	744	6700	8130	1.21	1613	0.3
307	206	160	6.81	737	6600	8120	1.23		0.5
308	207	160	6.82	728	6250	Lor.			Lost
309	208	160	6.82	788	7000	8600	1.23		0.4
310	209	160	6.71	789	6950	8030	1.16		0.3
311	210	120	6.66	715	5750	7420	1.29	1613	0.4
312	211	120	6.71	731	6200	7510	1.21		0.4
313	212	120	6.72	700	5850	6980	1.19		0.4
314	213	120	6.73	710	6250	7430	1.19		0.5
315	214	120	6.70	700	5700	6840	1.20		0.4
316	215	120	6.71	696	6050	7000	1.16		0.4
317	216	120	6.74	725	6350	7580	1.19		0.4
318	217	120	6.73	722	5950	7670	1.29		0.5
319	218	120	6.72	701	5750	6980	1.21		0.4
320	219	120	6.72	712	6150	7350	1.20		0.4
321	220	80	6.73	684	5500	6540	1.19	1616	0.4
322	221	80	6.72	678	5200	6650	1.28		0.4
323	222	80	6.72	680	5450	6480	1.19		0.4
324	223	80	6.84	685	5500	6590	1.20		0.3
325	224	80	6.81	665	5650	6370	1.13		0.3
326	225	80	6.73	688	5300	6600	1.25		0.4
327	226	80	6.80	674	5450	6410	1.18		0.3
328	227	80	6.82	686	5750	6930	1.21		0.4
329	228	80	6.84	672	5450	6780	1.24		0.4
330	229	80	6.66	685	5450	6480	1.19		0.4
331	230	20	6.69	654	5200	6030	1.16	1616	0.3
332	231	20	6.71	632	4900	5770	1.18		0.4
333	232	20	6.74	653	4900	5980	1.22		0.4
334	233	20	6.74	657	4950	6070	1.23		0.4
335	234	20	6.71	655	5000	5820	1.16		0.3
336	235	20	6.74	642	5000	5670	1.13		0.4
337	236	20	6.71	655	4950	5840	1.18		0.4
338	237	20	6.70	644	5050	5760	1.14		0.4
339	238	20	6.72	624	4000	5530	1.38		0.5
340	239	20	6.70	647	5000	5980	1.20		0.4

Test No.	Rifle Round No.	Temp (° F)	Shell Weight (lb)	Muzzle Velocity (fps)	Chamber Pressure (psi) Copper (T13) Gage	Chamber Pressure (psi) CEC Gage	Ratio CEC/Cu	CEC Gage No.	Rise Time (ms)
				Propellant M5, Lot RAD-SR-6-57, 20.76 os					
341	240	70	6.77	649	5400	6300	1.17	1615	Lost
342	241	70	6.71	679	5250	6510	1.24		0.3
343	242	70	6.70	676	5450	6200	1.14		0.3
344	243	70	6.74	665	5550	6310	1.14		0.3
345	244	70	6.70	656	5450	6620	1.21		0.3
346	245	140	6.70	727	5950	7630	1.28	1615	0.3
347	246	140	6.73	729	6350	8080	1.27		0.4
348	247	140	6.71	720	6350	7320	1.15		0.4
349	248	140	6.69	755	6400	7740	1.21		0.3
350	249	140	6.74	726	6200	7390	1.19		0.4
351	250	140	6.70	754	6400	7610	1.19		0.4
352	251	140	6.73	732	6250	7290	1.17		0.3
353	252	140	6.74	715	6550	7750	1.18		0.3
354	253	140	6.74	718	6000	7530	1.26		0.4
355	254	140	6.69	721	6300	7710	1.22		0.5
356	255	100	6.66	711	5950	7010	1.18	1617	0.4
357	256	100	6.70	711	5900	6850	1.16		0.3
358	257	100	6.71	721	5700	7120	1.25		0.3
359	258	100	6.73	711	5750	6860	1.19		0.3
360	259	100	6.73	704	5650	6980	1.24		0.4
361	260	100	6.72	710	5750	7270	1.26		0.4
362	261	100	6.72	694	5900	6880	1.17		0.3
363	262	100	6.71	710	5650	7000	1.24		0.3
364	263	100	6.73	710	6100	7120	1.17		0.4
365	264	100	6.72	717	5850	7020	1.20		0.3
366	265	40	6.80	668	5200	6220	1.20	1617	0.4
367	266	40	6.74	650	5350	6270	1.17		0.4
368	267	40	6.72	671	5050	6220	1.23		0.3
369	268	40	6.80	650	5250	6040	1.15		0.3
370	269	40	6.71	663	4850	5930	1.22		0.3
371	270	40	6.81	662	5000	6090	1.22	1618	0.3
372	271	40	6.75	641	5200	5940	1.14		0.3
373	272	40	6.74	663	4950	6040	1.22		0.3
374	273	40	6.79	635	4900	5940	1.21		0.4
375	274	40	6.72	663	4950	6050	1.22		0.4
376	275	0	6.77	609	4600	5310	1.15	1618	0.4
377	276	0	6.80	617	4550	5340	1.17		0.4
378	277	0	6.74	622	4500	5730	1.27		0.4
379	278	0	6.81	614	4750	5730	1.21		0.3
380	279	0	6.76	609	4300	5320	1.24		0.4
381	280	0	6.79	607	4600	5290	1.15		0.4
382	281	0	6.76	625	4400	5530	1.26		0.4
383	282	0	6.79	623	4400	5390	1.22		0.4
384	283	0	6.74	610	4650	5440	1.17		0.4
385	284	0	6.79	617	4600	5690	1.24		0.4

Summary of Velocity, Pressure, Recoil, and Target Accuracy Results 90 mm T246E6R7 HEAT Projectile, Fired from 90mm T219E4 Rifle (300 yd. Range)

Firing dates: Rifle Round Nos
7 through 73 - 3 Nov 59
76 through 135 - 4 Nov 59
138 through 187 - 5 Nov 59
198 through 210 - 17 Nov 59
213 through 249 - 18 Nov 59
250 through 294 - 19 Nov 59

Propellant Type	Temp (° F)	Rifle Round No.	Muzzle Velocity[a] (fps)				Pressure (psi/100)				Impact Probable Error (mil)				Avg Recoil (lb-sec)
			Rounds Consumed	Avg	Std Dev	Maximum Dispersion	Rounds Consumed	Avg	Std Dev	Maximum Dispersion	Rounds Consumed	Vertical Obs	Vertical Corr[b]	Lat	
T31	70	138-147	10	683	11.9	36	10	50.5	2.0	6.0	10	.79	.19	.44	2.0
T28	-50	148-157	10	602	13.1	36	10	43.5	2.2	6.5	8	1.07	.55	.36	.7
T31	10	158-167	10	765	49.5	168	10	58.0	12.8	43.5	Six rounds over target				1.6
			[c] 9	751	27.8	83	[c] 9	54.5	4.5	14.5					
M5	10	168-177	[c] 9	626	6.3	21	10	47.5	1.9	7.0	[d] 9	1.00	.71	.37	.7
											[c] 8	.53	.31		
T28	10	178-187	10	641	14.7	50	10	48.5	1.1	3.0	[d] 9	1.39	.84	.55	1.2
M5	70	198-207	10	681	11.9	46	9	54.0	2.5	8.0	9	2.57	1.83	1.07	.7
			[d] 9	678	5.2	17					[d] 8	.92	.61	.53	
M5	160	208-210	3	734	[e]14.2	24	3	60.5	[e]6.5	11.0	3	[e]1.01	[e].59	[e].22	1.3
M5	160	213-219	7	757	26.0	66	7	67.0	2.5	7.5	[d] 6	1.33	.34	.37	1.0
											[f] 9	1.25	.43	.33	
M5	120	220-229	10	712	12.3	35	10	60.0	2.3	6.5	10	1.00	.47	.71	.5
											[d] 8	.91	.47	.26	
M5	80	230-239	10	683	7.0	22	10	55.0	1.6	5.5	10	.96	.69	.34	1.0
M5	20	240-249	10	647	11.1	34	10	49.0	3.3	12.0	7	.69	.73	.63	.9
M5	70	250-254	5	666	12.2	28	5	54.0	1.1	3.0	5	1.30	.93	.40	.2
											[c] 4	.24			
											[d] 4	1.48	.86	.43	
											[cd] 3	.23			
M5	140	255-264	10	731	13.4	37	10	62.5	1.8	6.0	10	2.23	2.64	1.53	1.0
											[d] 7	.64	.58	.33	
M5	100	265-274	10	711	7.2	27	10	58.0	1.5	4.5	[d] 9	.75	.48	.29	1.4
											[cd] 8	.39			
M5	40	275-284	10	659	11.7	34	10	50.5	1.7	5.0	10	1.63	1.00	.58	1.1
M5	0	285-294	10	619	6.6	17	10	45.5	1.4	4.5	10	1.14	.91	.43	.5

[a] Corrected to 6.70 lbs shell weight
[b] Corrected to a constant velocity
[c] Omitting one "maverick" round
[d] Omitting rounds on which camera showed either partial or complete separation of spike
[e] Estimated from maximum dispersion
[f] Average of rounds fired at 160° F

APPENDIX B

DRAWINGS OF TAIL BOOMS

Drawing	SFC 11208	Type C tail boom
	SFC 11209	Type B tail boom
	SFC 11210	Type E tail boom
	SFC 11211	Type D tail boom

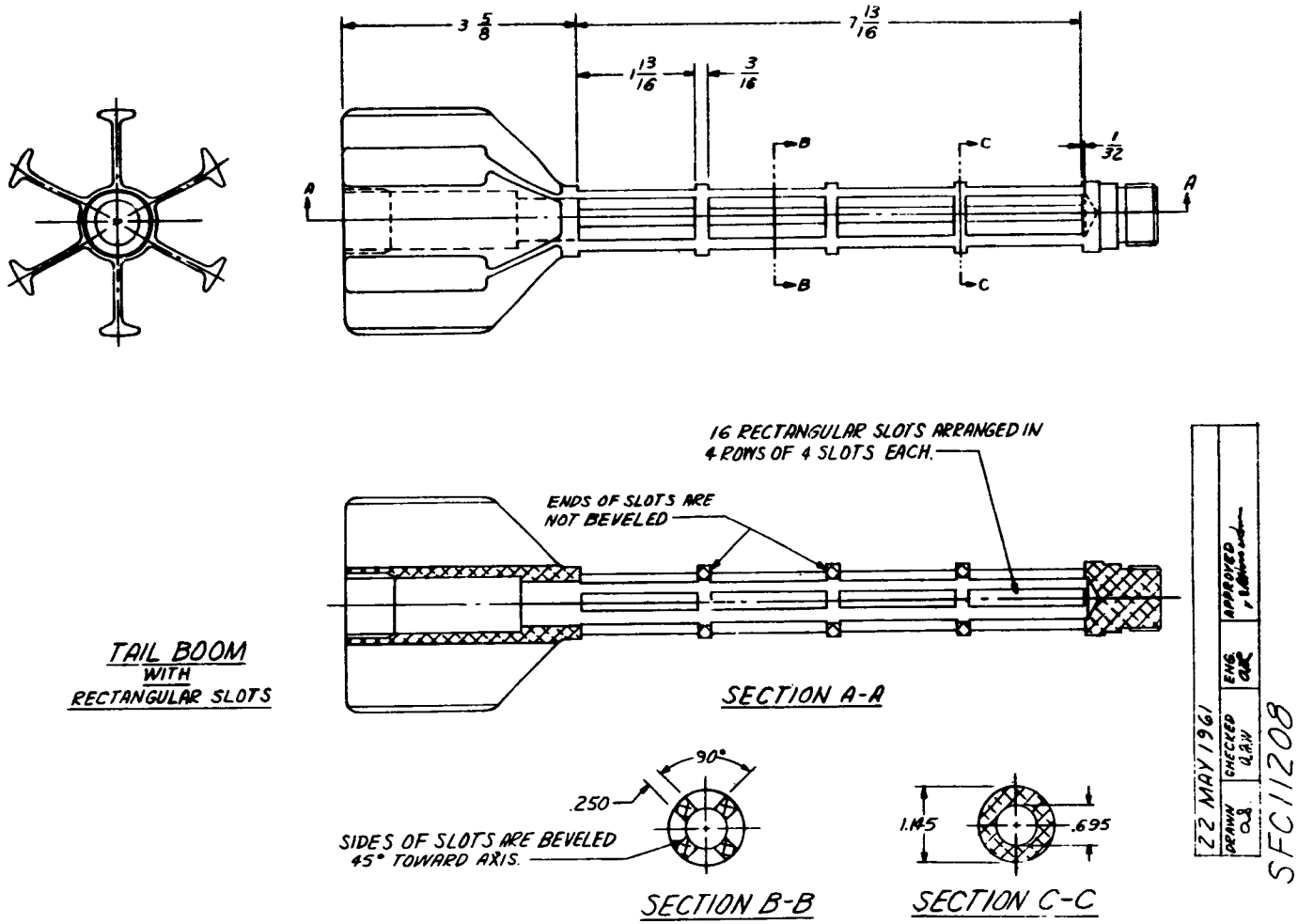
3 5/8
7 13/16
1 13/16
3/16
1/32
A
B
C
16 RECTANGULAR SLOTS ARRANGED IN 4 ROWS OF 4 SLOTS EACH.
ENDS OF SLOTS ARE NOT BEVELED
TAIL BOOM WITH RECTANGULAR SLOTS
SECTION A-A
90°
.250
SIDES OF SLOTS ARE BEVELED 45° TOWARD AXIS.
SECTION B-B
1.145
.695
SECTION C-C
22 MAY 1961
DRAWN
CHECKED
ENG.
APPROVED
SFC11208

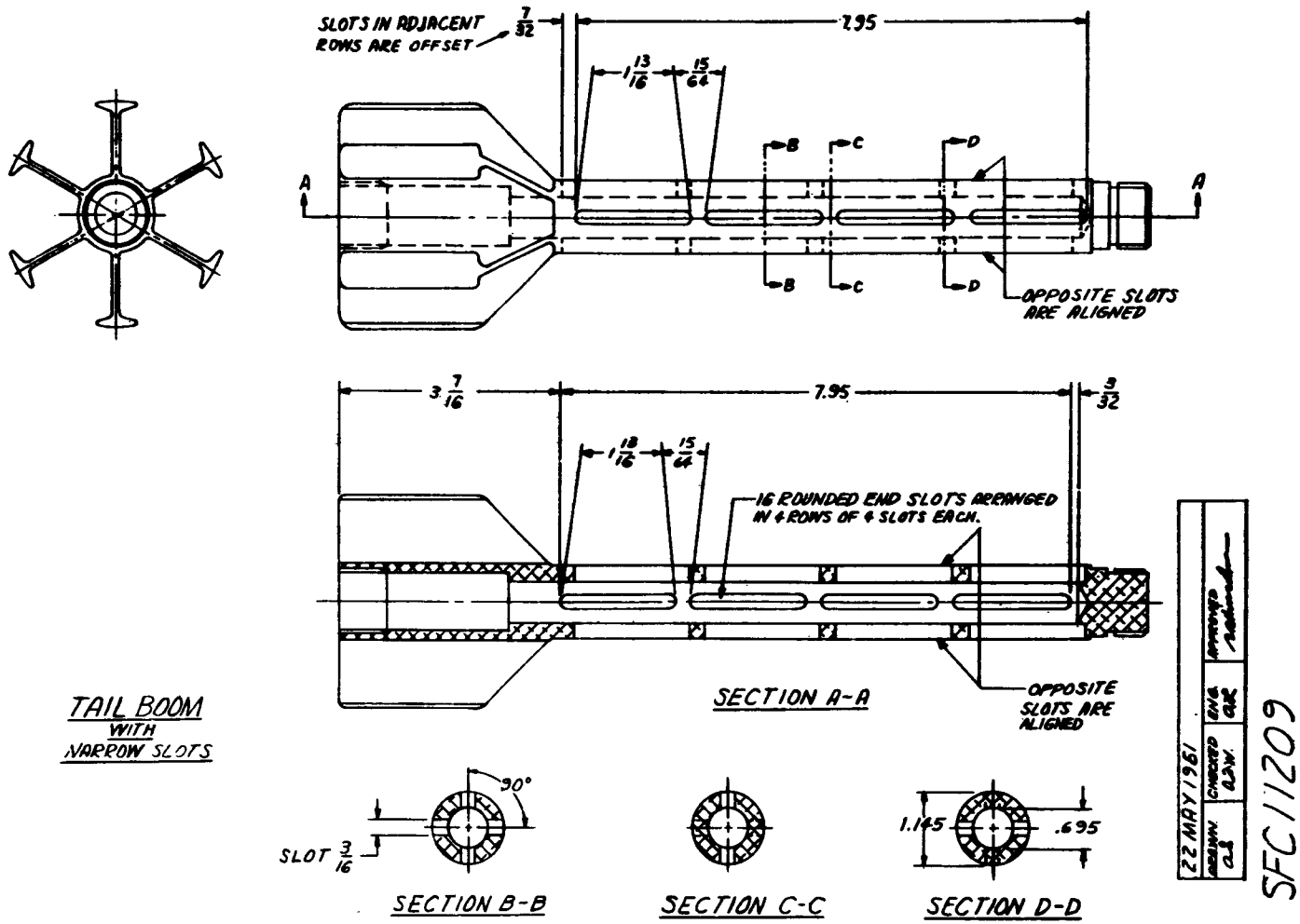
SLOTS IN ADJACENT ROWS ARE OFFSET
7/32
7.95
1 13/16
15/64
A
B
C
D
OPPOSITE SLOTS ARE ALIGNED
3 7/16
3/32
16 ROUNDED END SLOTS ARRANGED IN 4 ROWS OF 4 SLOTS EACH.
OPPOSITE SLOTS ARE ALIGNED
SECTION A-A
TAIL BOOM WITH NARROW SLOTS
90°
SLOT 3/16
SECTION B-B
SECTION C-C
1.145
.695
SECTION D-D
22 MAY 1961
DRAWN
CHECKED
ENG.
APPROVED
SFC11209

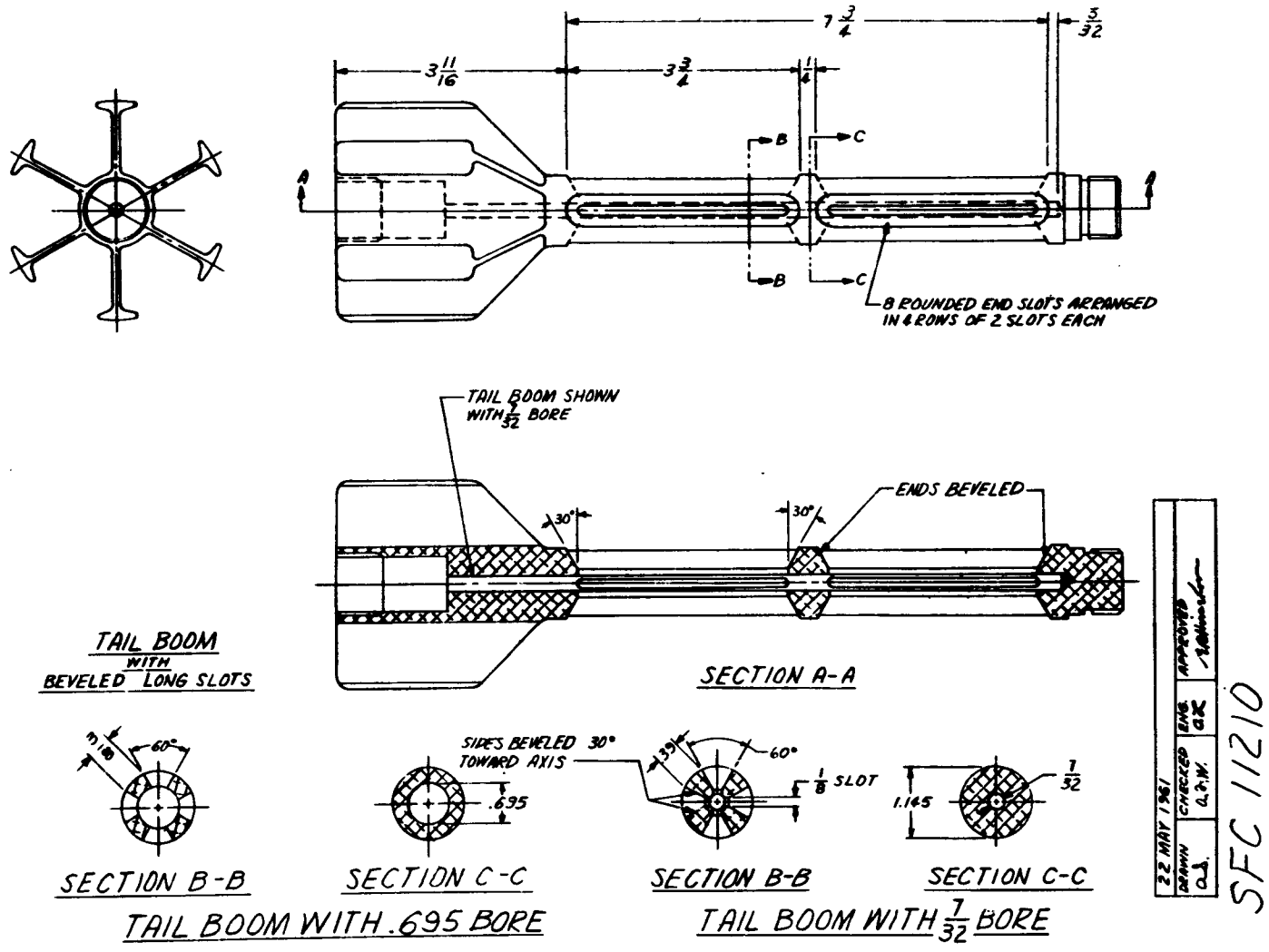

7 3/4
3/32
3 11/16
3 3/4
1/4
A
B
C
8 ROUNDED END SLOTS ARRANGED IN 4 ROWS OF 2 SLOTS EACH
TAIL BOOM SHOWN WITH 7/32 BORE
ENDS BEVELED
30°
SECTION A-A
TAIL BOOM WITH BEVELED LONG SLOTS
60°
SECTION B-B
.695
SECTION C-C
SIDES BEVELED 30° TOWARD AXIS
39°
60°
1/8 SLOT
SECTION B-B
1.145
7/32
SECTION C-C
TAIL BOOM WITH .695 BORE
TAIL BOOM WITH 7/32 BORE
22 MAY 1961
DRAWN
CHECKED
ENG.
APPROVED
SFC 11210

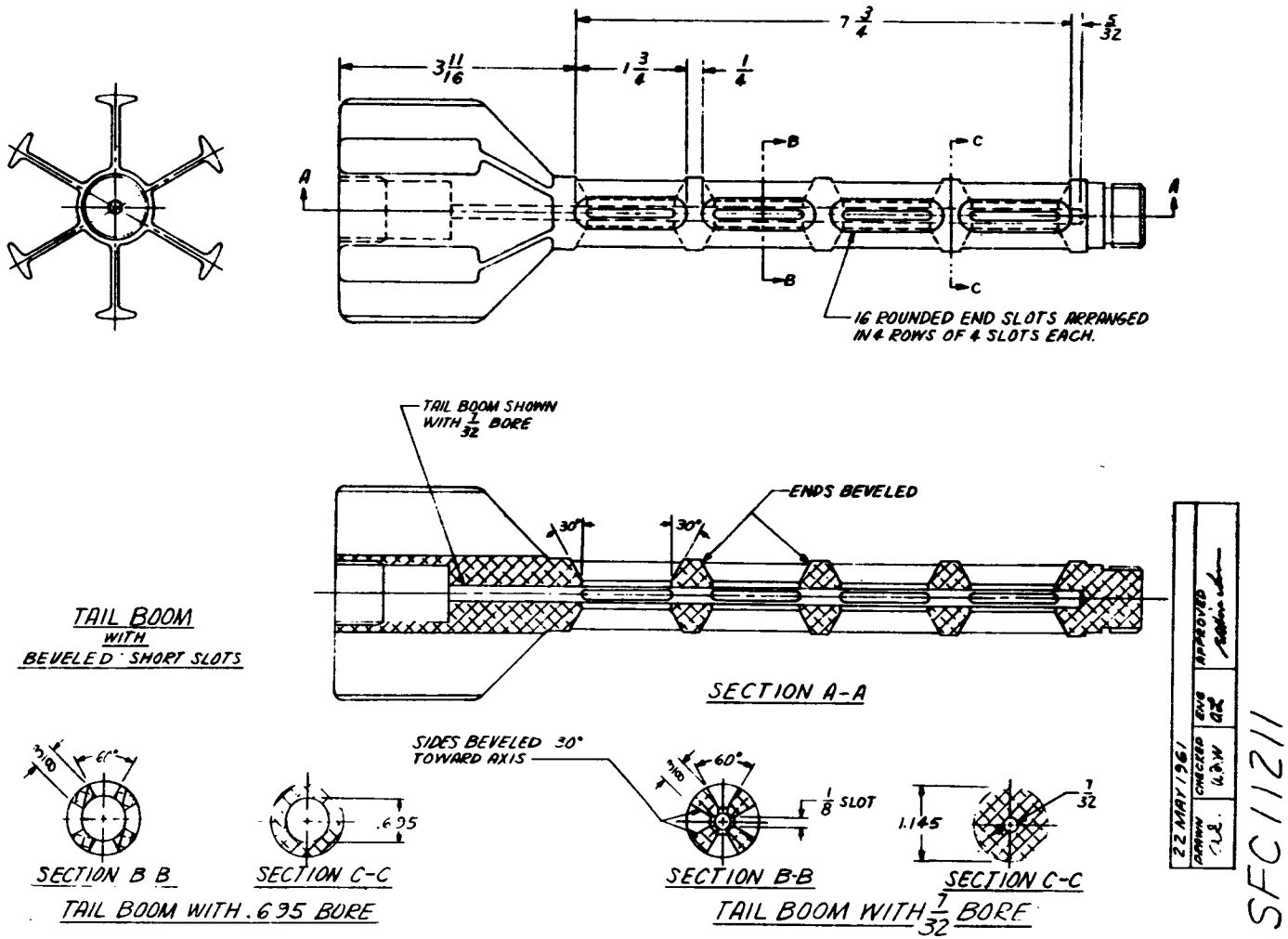

7 3/4
5/32
3 11/16
1 3/4
1/4
A
B
C
16 ROUNDED END SLOTS ARRANGED IN 4 ROWS OF 4 SLOTS EACH.
TAIL BOOM SHOWN WITH 7/32 BORE
ENDS BEVELED
30°
30°
TAIL BOOM WITH BEVELED SHORT SLOTS
SECTION A-A
SIDES BEVELED 30° TOWARD AXIS
3/8
60°
.695
1/8 SLOT
1.145
7/32
SECTION B B
SECTION C-C
SECTION B-B
SECTION C-C
TAIL BOOM WITH .695 BORE
TAIL BOOM WITH 7/32 BORE
22 MAY 1961
DRAWN
CHECKED
ENG
APPROVED
SFC11211

DISTRIBUTION

1 - Hq, U.S.Army Materiel Command
Attn: AMCRD-DE-W
Washington 25, D. C.

1 - Attn: AMCRD-RS-CM

1 - Attn: AMCRD-DE-MI

1 - Attn: AMCRD-DE-MO

1 - Attn: AMCRD-DE-N

1 - Commanding General
U.S.Army Munitions Command
Picatinny Arsenal
Dover, N. J.

1 - Attn: AMSMU-LM, Liaison Officer
U.S.Marince Corps

1 - Attn: AMSMU-LC, Liaison Officer
Combat Development Command

1 - Commanding General
U.S. Army Weapons Command
Rock Island, Ill.

1 - Commanding General
Picatinny Arsenal
Attn: Technical Group
Dover, N. J.

1 - Attn: ORDBB-DN (NIKM)

2 - Commanding General
U.S.Army Test & Evaluation Command
Attn: Technical Library
Aberdeen Proving Ground, Md.

1 - Attn: Development & Proof Services

1 - Attn: Mr. G. T. Watson,
Development & Proof Services

1 - Commanding Officer
Ballistic Research Laboratory
Aberdeen Proving Ground, Md.

1 - Attn: Dr. F. E. Grubbs

1 - Attn: Mr. H. P. Gay

1 - Attn: Mr. C. Poor, FWSA

1 - Commanding Officer
Springfield Armory
Attn: Engineering Group
Springfield 1, Mass.

1 - Commanding Officer
Watervliet Arsenal
Watervliet, N. Y.

1 - Commanding Officer
Watertown Arsenal
Attn: Technical Information Section
Watertown 72, Mass.

1 - Commanding Officer
Detroit Arsenal
Centerline, Mich.

1 - Commanding Officer
Harry Diamond Laboratories
Washington 25, D. C.

1 - Attn: AMXDO-TIB

1 - Commanding General
U.S.Army Missile Command
Attn: Technical Library
Redstone Arsenal, Ala.

1 - Attn: Office of the Deputy CG
for Guided Missiles

1 - Attn: Office of the Deputy CG
for Ballistic Missiles

1 - Commanding Officer
U.S.Army Chemical Center
Attn: Mr. W. W. Beyth
Weapons Research Division
Chemical Warfare Laboratory
Army Chemical Center, Md.

1 - Commanding General
Hq, U.S. Continental Army Command
Attn: ATDEV-3
Fort Monroe, Va.

1 - President, U.S.Army Armor Board
Fort Knox, Kentucky

1 - President, U.S.Army Infantry Board
Attn: Dir, Rocket & Recoilless
Fort Benning, Ga.

1 - Commandant, U.S.Army Armor School
Fort Knox, Kentucky

1 - Commandant, U.S.Army Artillery
and Missile School
Attn: Ch, Combat Development Dept
Fort Sill, Oklahoma

1 - Commandant, U.S.Army Infantry School
Fort Benning, Ga.

1 - Weapons Systems Evaluation Group
Office, Secretary of Defense
Washington 25, D. C.

1 - Operations Research Office
Johns Hopkins University
Bethesda, Md.

1 - U.S.Naval Ordnance Test Station
China Lake, Calif.

1 - Commandant
Hq, U.S.Marine Corps
Washington 25, D. C.

10 - Armed Services Technical
Information Agency
Arlington Hall Station
Attn: TIPDR
Arlington 12, Va.

AD- ACCESSION NO.

FRANKFORD ARSENAL, Research and Development Group, Philadelphia 37, Pa.
A NEW METHOD OF IGNITION DEVELOPED FOR RECOILLESS GUNS FIRING FIN-STABILIZED PROJECTILES by A. Levine

FA Rpt R-1630, Dec 62; 47 pp incl tables and illus
OMS Code 5520.11.43400.01; DA Project 502-01-008
Unclassified Report

The principles of uniform ignition formulated for special types of recoilless weapons have been applied to recoilless weapons firing fin-stabilized projectiles. A new ignition system, consisting of the following, has been developed for these weapons: (1) a duPont Co. pyrocore explosive train; (2) an M47 detonator (to fire the pyrocore); (3) a special housing to contain the firing pin; M47 detonator, and one end of the pyrocore; (4) a slotted tail boom with a small diameter central hole extending the entire length of the boom (to contain the pyrocore); (5) a polyethylene container for retaining a fixed quantity of AlBP; (6) a cardboard container foreretaining a fixed quantity of propellant charge.

Better uniformities in chamber pressure and muzzle velocities have been obtained at ambient temperature when the new ignition system has been used to fire the 90 mm M67 recoilless gun, as compared with results obtained with previous ignition systems.

UNCLASSIFIED

1. Fin-stabilized Projectiles
2. Ignition Systems
3. Interior Ballistics
4. Recoilless Rifle Systems
5. Antitank Weapon Systems

I. R-1630
II. Levine, A.
III. OMS 5520.11.43400.01

DISTRIBUTION LIMITATIONS:
None; obtain copies from ASTIA.

UNCLASSIFIED

AD- ACCESSION NO.

FRANKFORD ARSENAL, Research and Development Group, Philadelphia 37, Pa.
A NEW METHOD OF IGNITION DEVELOPED FOR RECOILLESS GUNS FIRING FIN-STABILIZED PROJECTILES by A. Levine

FA Rpt R-1630, Dec 62; 47 pp incl tables and illus
OMS Code 5520.11.43400.01; DA Project 502-01-008
Unclassified Report

The principles of uniform ignition formulated for special types of recoilless weapons have been applied to recoilless weapons firing fin-stabilized projectiles. A new ignition system, consisting of the following, has been developed for these weapons: (1) a duPont Co. pyrocore explosive train; (2) an M47 detonator (to fire the pyrocore); (3) a special housing to contain the firing pin; M47 detonator, and one end of the pyrocore; (4) a slotted tail boom with a small diameter central hole extending the entire length of the boom (to contain the pyrocore); (5) a polyethylene container for retaining a fixed quantity of AlBP; (6) a cardboard container foreretaining a fixed quantity of propellant charge.

Better uniformities in chamber pressure and muzzle velocities have been obtained at ambient temperature when the new ignition system has been used to fire the 90 mm M67 recoilless gun, as compared with results obtained with previous ignition systems.

UNCLASSIFIED

1. Fin-stabilized Projectiles
2. Ignition Systems
3. Interior Ballistics
4. Recoilless Rifle Systems
5. Antitank Weapon Systems

I. R-1630
II. Levine, A.
III. OMS 5520.11.43400.01

DISTRIBUTION LIMITATIONS:
None; obtain copies from ASTIA.

UNCLASSIFIED

AD- ACCESSION NO.

FRANKFORD ARSENAL, Research and Development Group, Philadelphia 37, Pa.
A NEW METHOD OF IGNITION DEVELOPED FOR RECOILLESS GUNS FIRING FIN-STABILIZED PROJECTILES by A. Levine

FA Rpt R-1630, Dec 62; 47 pp incl tables and illus
OMS Code 5520.11.43400.01; DA Project 502-01-008
Unclassified Report

The principles of uniform ignition formulated for special types of recoilless weapons have been applied to recoilless weapons firing fin-stabilized projectiles. A new ignition system, consisting of the following, has been developed for these weapons: (1) a duPont Co. pyrocore explosive train; (2) an M47 detonator (to fire the pyrocore); (3) a special housing to contain the firing pin; M47 detonator, and one end of the pyrocore; (4) a slotted tail boom with a small diameter central hole extending the entire length of the boom (to contain the pyrocore); (5) a polyethylene container for retaining a fixed quantity of AlBP; (6) a cardboard container foreretaining a fixed quantity of propellant charge.

Better uniformities in chamber pressure and muzzle velocities have been obtained at ambient temperature when the new ignition system has been used to fire the 90 mm M67 recoilless gun, as compared with results obtained with previous ignition systems.

UNCLASSIFIED

1. Fin-stabilized Projectiles
2. Ignition Systems
3. Interior Ballistics
4. Recoilless Rifle Systems
5. Antitank Weapon Systems

I. R-1630
II. Levine, A.
III. OMS 5520.11.43400.01

DISTRIBUTION LIMITATIONS:
None; obtain copies from ASTIA.

UNCLASSIFIED

AD- ACCESSION NO.

FRANKFORD ARSENAL, Research and Development Group, Philadelphia 37, Pa.
A NEW METHOD OF IGNITION DEVELOPED FOR RECOILLESS GUNS FIRING FIN-STABILIZED PROJECTILES by A. Levine

FA Rpt R-1630, Dec 62; 47 pp incl tables and illus
OMS Code 5520.11.43400.01; DA Project 502-01-008
Unclassified Report

The principles of uniform ignition formulated for special types of recoilless weapons have been applied to recoilless weapons firing fin-stabilized projectiles. A new ignition system, consisting of the following, has been developed for these weapons: (1) a duPont Co. pyrocore explosive train; (2) an M47 detonator (to fire the pyrocore); (3) a special housing to contain the firing pin; M47 detonator, and one end of the pyrocore; (4) a slotted tail boom with a small diameter central hole extending the entire length of the boom (to contain the pyrocore); (5) a polyethylene container for retaining a fixed quantity of AlBP; (6) a cardboard container foreretaining a fixed quantity of propellant charge.

Better uniformities in chamber pressure and muzzle velocities have been obtained at ambient temperature when the new ignition system has been used to fire the 90 mm M67 recoilless gun, as compared with results obtained with previous ignition systems.

UNCLASSIFIED

1. Fin-stabilized Projectiles
2. Ignition Systems
3. Interior Ballistics
4. Recoilless Rifle Systems
5. Antitank Weapon Systems

I. R-1630
II. Levine, A.
III. OMS 5520.11.43400.01

DISTRIBUTION LIMITATIONS:
None; obtain copies from ASTIA.

UNCLASSIFIED